Implement JIS standard

Symbol

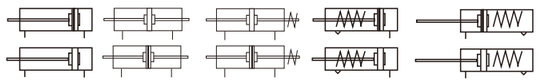

■ Specification

Bore size(mm)	20	25	32	40
Fluid	Compressed air			
Action	Double acting, Single acting			
Max. pressure MPa	1.0Mpa			
Min. pressure MPa	Double acting : 0.1, Single acting : 0.2			
Ambient and fluid temperature	Without switch : -10°C~70°C, With switch-10°C~60°C			
Piston speed	50~750mm/s			
Cushion	Rubber bumper/Air cushion			
Port size	Rc1/8	Rc1/8	Rc1/8	Rc1/ 4

■ Stroke/Auto switch model

Bore (mm)	Single acting	Double acting		Switch model	Mount code (48 type)	Switch model (direct mount)
	Standard stroke	Standard stroke	Max.			
20	10 15 20 25 30 40 50 60 75 80 100	10 15 20 25 30 40 50 60 75 80 100 125 150 160 175 200 250 300 350 400 450 500	500		BS-S20	
25	10 15 20 25 30 40 50 60 75 80 100	10 15 20 25 30 40 50 60 75 80 100 125 150 160 175 200 250 300 350 400 450 500	500		BS-S25	
32	10 15 20 25 30 40 50 60 75 80 100		500		BS-S32	
40	10 15 20 25 30 40 50 60 75 80 100		500		BS-S40	

Non-standard stroke is available, contact us if any special requirement.

■ Ordering code

PCM D 20 - 200 - 20 - S - L - A

Series

Null	Single rod
D	Double rod
J	Adjustable stroke
S	Spring return
T	Spring extend

Bore

Stroke

Adjustable stroke

Code	Stroke
10	10mm
20	20mm
30	30mm
40	40mm
50	50mm
75	75mm
100	100mm

Note: this option only for PCMJ.

Magnet

Null	Without magnet
S	Magnet

Installation

Code	Installation	Code	Installation
B	Standard (pivot)	G	Head side flange
U	Flat-end	MC	Rear eye
M	Round-end	MD	Rear clevis
L	Axial foot	FT	Rod side trunnion
F	Rod side flange	UT	Pivot rod side trunnion
UF	Pivot rod side flange	E	End bracket

Note: E only can combine with B type.
L,F,FT,MC and MD default M type installation.
PCMD and PCMJ basic type don't have this option.

Cushion

Null	Rubber
A	Air

Note: Air cushion applicable for bore larger than 16mm.

PCM Series Mini Cylinder harhesh

■ Dimensions (mm)

PCM/PCM-A(standard/air cushion)

Round-end-M

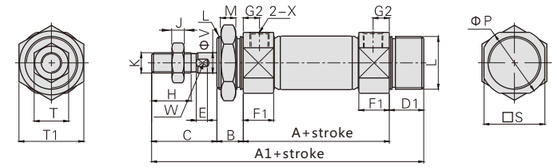

Pivot-B

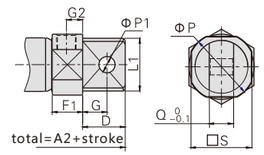

Flat-end-U

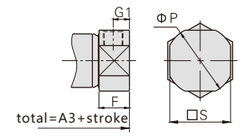

Bore	A	A1	A2	A3	B	C	D	D1	E	F	F1	G	G1	G2	H	J
20	62	116	124	103	13	28	21	14	5	14	14	12	7.5	7.5	16	5
25	62	120	128	108	13	32	21	14	5.5	14	14	12	7.5	7.5	20	6
32	64	122	136	110	13	32	27	14	6	14	14	15	7.5	7.5	20	6
40	88	154	165	138	16	34	27	16	6	21	21	15	11	11	22	8

Bore	K	L	L1	M	P	P1	Q	S	T	T1	X	V
20	M8×1.25	M20×1.5	20	8	27	8	12	25	13	26	Rc1/8	8
25	M10×1.25	M26×1.5	26	8	30	8	12	30	17	36	Rc1/8	10
32	M10×1.25	M26×1.5	26	8	38.5	10	20	34.5	17	36	Rc1/8	12
40	M14×1.5	M32×2.0	32	10	47	10	20	42.5	19	41	Rc1/4	16

PCMS (Spring return)

Round-end-M

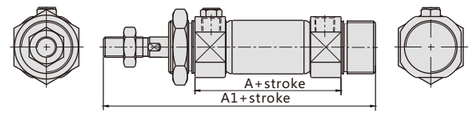

Pivot-B

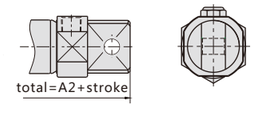

Flat-end-U

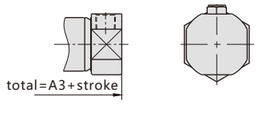

Symbol / Bore	A		A1		A2		A3	
	1~50	51~100	1~50	51~100	1~50	51~100	1~50	51~100
20	87	112	141	166	149	174	128	153
25	87	112	145	170	153	178	133	158
32	89	114	147	172	161	186	135	160
40	113	138	179	204	190	215	163	188

■ Dimensions (mm)

PCMT (Spring extend)

Round-end

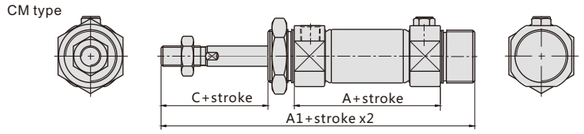

Pivot

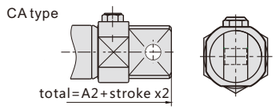

Flat-end

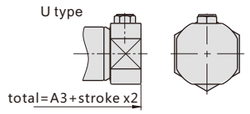

Symbol / Bore	A		A1		A2		A3		C
	1~50	51~100	1~50	51~100	1~50	51~100	1~50	51~100	
20	87	112	141	166	149	174	128	153	27
25	87	112	145	170	153	178	133	158	31
32	89	114	147	172	161	186	135	160	31
40	113	138	179	204	190	215	163	188	34

PCMD/PCMD-A (Double rod/Double rod air cushion)

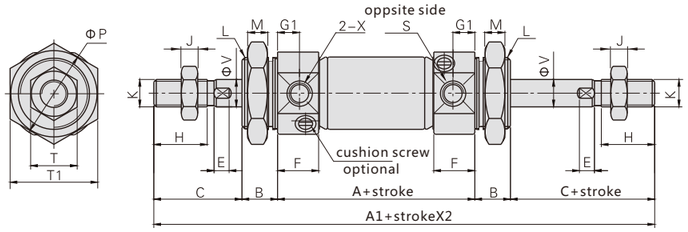

PCMJ/PCMJ-A (Adjustable stroke/Adjustable stroke air cushion)

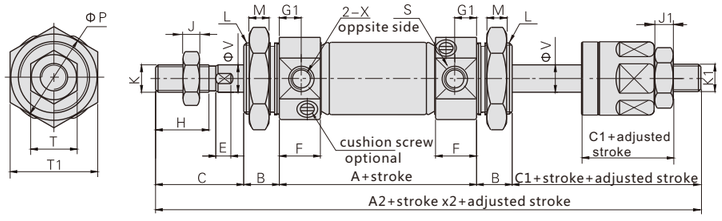

Bore	A	A1	A2	B	C	C1	E	F	G1	H	J	J1
20	62	144	140	13	28	24	5	14	7.5	16	5	5
25	62	152	147	13	32	27	5.5	14.5	7.5	20	6	6
32	64	154	149	13	32	27	6	14.5	7.5	20	6	6
40	88	188	182	16	34	28	7	21.5	11	22	8	7

Bore	K	K1	L	M	P	S	T	T1	X	V
20	M8×1.25	M8×1.25	M20×1.5	8	27	25	13	26	Rc1/8	8
25	M10×1.25	M10×1.25	M26×1.5	8	30	30	17	36	Rc1/8	10
32	M10×1.25	M10×1.25	M26×1.5	8	38.5	34.5	17	36	Rc1/8	12
40	M12×1.5	M14×1.5	M32×2.0	10	47	42.5	19	41	Rc1/4	16

PCM Series Mini Cylinder
harhesh

■ Dimensions (mm)

Axial foot

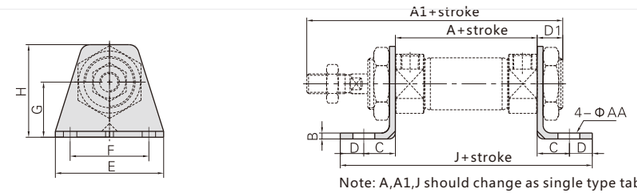

Note: A,A1,J should change as single type table when single acting.

code	Bore	A	A1	AA	B	C	D	D1	E	F	G	H	J
PCM-L020	20	62	116	7	3	20	8	13	55	40	25	40	118
PCM-L025	25	62	120	7	3	20	8	13	55	40	28	47	118
	32	64	22	7	3	20	8	13	55	40	28	47	120
PCM-L040	40	88	154	7	3	23	10	16	75	55	30	54	154

Note: contains 2 foot stands and 1nut.

Flange mount

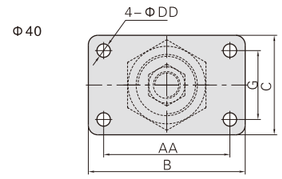

Note: A,A2 should change as single type table when single acting.

code	Bore	A	A2	AA	B	C	D	DD	F	G
PCM-F020	20	62	124	60	75	34	21	7	4	—
PCM-F025	25	62	128	60	75	40	21	7	4	—
	32	64	136	60	75	40	27	7	4	—
PCM-F040	40	88	165	66	82	52	27	7	5	36

Note: contains 1 flange.

End bracket mount

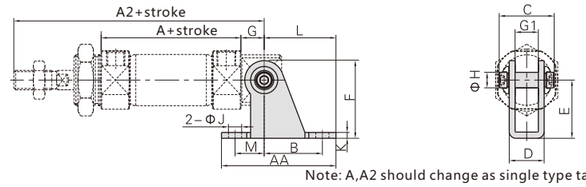

Note: A,A2 should change as single type table when single acting.

code	Bore	A	A2	AA	B	C	D	E	F	G	G1	H	K	J	L	M
PCM-E020	20	62	115	59	30	32	18.1	30	40	12	12.1	8	3	6.8	37	15
	25	62	119	59	30	32	18.1	30	40	12	12.1	8	3	6.8	37	15
PCM-E032	32	64	124	75	40	44	28.1	40	53	15	20.1	10	4	9	50	15
	40	88	153	75	40	44	28.1	40	53	15	20.1	10	4	9	50	15

Rod side trunnion

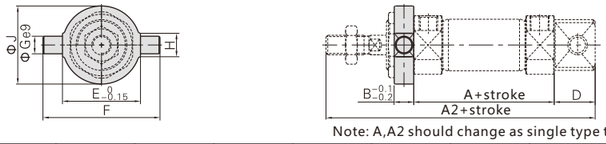

Note: A,A2 should change as single type table when single acting.

code	Bore	A	A2	B	D	E	F	G	H	J
PCM-T020	20	62	124	10	21	32	52	8	12	32
PCM-T025	25	62	128	10	21	40	60	9	12	40
	32	64	135	10	27	40	60	9	12	40
PCM-T040	40	88	165	11	27	53	77	10	14	53

Rod side trunnion lock nut

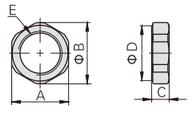

code	Bore	A	B	C	D	E
PCM-SN020	20	26	28	8	25	M20×1.5
PCM-SN025	25	32	34	8	31	M26×1.5
	32	32	34	8	31	M26×1.5
PCM-SN040	40	41	45	10	40	M32×2.0

■ Dimensions (mm)

Rear eye

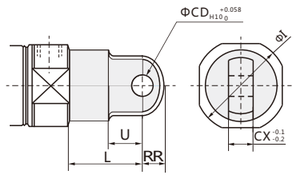

Rear clevis

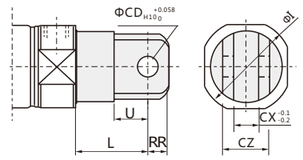

Bore (mm)	Rear eye							Rear clevis							
	code	L	U	RR	ΦI	ΦCD	CX	Series	L	U	RR	ΦCD	CX	CZ	ΦI
20	PCM-C020	30	14	9	28	9	10	PCM-D020	30	14	9	9	10	19	28
25	PCM-C025	30	14	9	33.5	9	10	PCM-D025	30	14	9	9	10	19	33.5
32		30	14	9	37.5	9	10		30	14	9	9	10	19	37.5
40	PCM-C040	30	14	11	46.5	10	15	PCM-D040	30	14	11	10	15	30	46.5

I type fitting

PCM-I020
PCM-I025

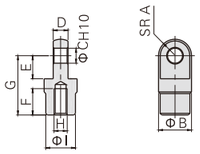

PCM-I040

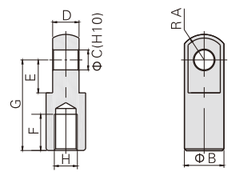

code	Bore	A	B	C	D	E	F	G	H	I
PCM-I020	20	9.5	20	9	9	14	16	36	M8X1.25	18
PCM-I025	25、32	9.5	20	9	9	14	18	38	M10X1.25	18
PCM-I040	40	15	24	12	16	20	22	55	M14X1.5	-

Y type fitting

PCM-Y020
PCM-Y025

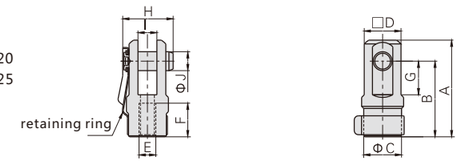

PCM-Y040

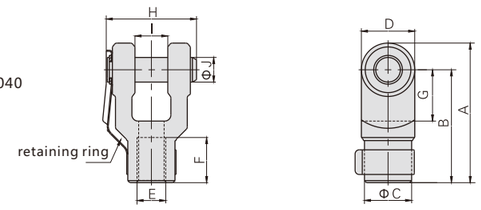

code	Bore	A	B	C	D	E	F	G	H	I	J
PCM-Y020	20	46	36	18	17.5	M8X1.25	16	16	24	9	9
PCM-Y025	25、32	48	38	18	17.5	M10X1.25	18	16	24	9	9
PCM-Y040	40	68	55	23	26	M14X1.5	22	25	44	16	12

■ Product features

Using improved sealing ring to improve performance of cylinder.
Using advanced grease to ensure its life.

Symbol

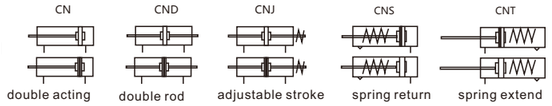

■ Specification

Bore (mm)		16	20	25	32	40	50	63
Action		Double acting/Single acting(no single for Ø50、Ø63)						
Fluid		Compressed air						
Pressure range Mpa		0.1～0.9						
Proof pressure Mpa		1.35						
Temp. range		- 10～60℃						
Speed range		Double acting: 30～800 Single acting: 50~800						
Material of body		Stainless steel						
Cushion	Standard	Rubber bumper					—	
	Option	—	Adjustable air cushion					
Lubrication		Non-lube						
Port size		M5×0.8	Rc1/8				Rc1/4	

Please use ISOVG32 oil if needed.

■ Stroke/Auto switch model

Bore(mm)/acting		Standard* (mm)	Max.	Switch model	Mount code (48 type)	Switch model (direct mount)
16	Double	25 50 75 80 125 150 175 200	400		BS-S16	KTX-32R KTX-32P
	Single	25 50 75 100	100			
20	Double	25 50 75 80 125 150 175 200 250 300	500		BS-S20	
	Single	25 50 75 100	100			
25	Double	25 50 75 80 125 150 175 200 250 300 350 400 450 500	500		BS-S25	
	Single	25 50 75 100	100			
32	Double	25 50 75 80 125 150 175 200 250 300 350 400 450 500	500		BS-S32	
	Single	25 50 75 100	100			
40	Double	25 50 75 80 125 150 175 200 250 300 350 400 450 500	500		BS-S40	
	Single	25 50 75 100	100			
50	Double	25 50 75 80 125 150 175 200 250 300 350 400 450 500	500		BS-S50	
63	Double	25 50 75 80 125 150 175 200 250 300 350 400 450 500	500		BS-S63	

*Non-standard stroke is available, contact us if any special requirement.

■ Ordering code

CN D 40 - 150 - 20 - S - L - A

Series

Action

Null	Double acting
D	Doule rod
J	Adjustable stroke
S	Spring return
T	Spring extend
RU	Upper mount
RF	Front mount

Bore

stroke

Adjustable stroke

Code	Stroke
10	10mm
20	20mm
30	30mm
40	40mm
50	50mm
75	75mm
100	100mm

Note: this option only for CNJ.

Magnet

Null	Without magnet
S	Magnet

Installation

Code	Installation
B	Standard(pivot)
M	Round-end
U	Flat-end
L	Axial foot
F	Rod side flange
E	End bracket

Note: no B, M, U, E option for CND and CNJ

Cushion

Null	Rubber
A	Air

■ Dimensions (mm)

CN/CN-A (Standard/Air cushion)

Standard (pivot)-B

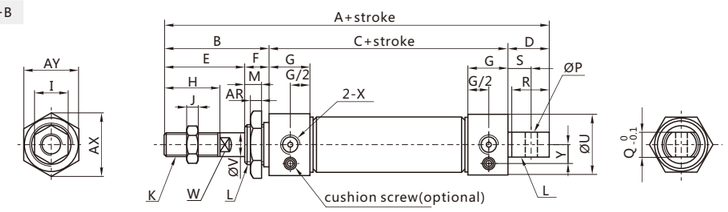

Round-end-M

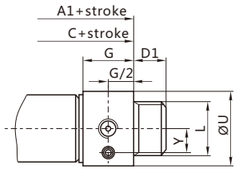

Flat-end-U

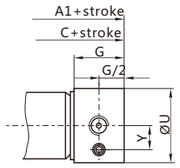

Bore (mm)	A	A1	B	C	D	D1	E	F	G	H	I	J	K
16	114	98	38	60	16	16	22	16	10	16	10	5	M6x1.0
20	137	116	40	76	21	12	28	12	16	20	13	6	M8x1.25
25	141	120	44	76	21	14	30	14	16	22	17	6	M10x1.25
32	147	120	44	76	27	14	30	14	16	22	17	6	M10x1.25
40	149	122	46	76	27	14	32	14	16	24	17	7	M12x1.25

Bore (mm)	L	M	P	Q	R	S	U	V	W	X	AR	AX	AY	Y
16	M16x1.5	14	6	12	14	9	21	6	5	M5x0.8	6	26.6	23	–
20	M22x1.5	10	8	16	19	12	27	8	6	Rc1/8	7	37	32	6.5
25	M22x1.5	12	8	16	19	12	30	10	8	Rc1/8	6	37	32	9.2
32	M24x2.0	12	10	16	25	15	35	12	10	Rc1/8	8	41.6	36	11.5
40	M30x2.0	12	12	20	25	15	41.6	16	14	Rc1/8	9	52	45	15

CN-A (air cushion)

Standard (pivot)-B

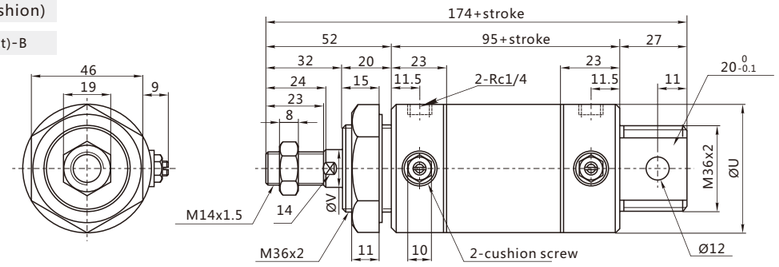

Round-end-M

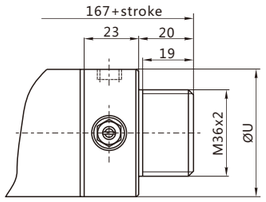

Flat-end-U

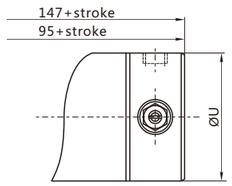

Bore (mm)	U	V
50	53	16
63	67	16

CN Series Mini Cylinder
harhesh

■ Dimensions (mm)

CNS-Spring return

Standard (pivot)-B

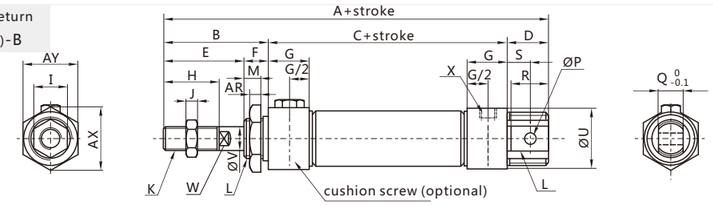

Round-end-M

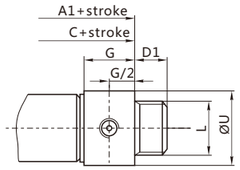

Flat-end-U

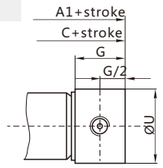

Symbol	A		A1		B	C		D	D1	E	F	G	H
Bore/Stroke	≤50	51~100	≤50	51~100		≤50	51~100						
16	139	164	123	148	38	85	110	16	16	22	16	10	16
20	162	187	141	166	40	101	126	21	12	28	12	16	20
25	166	191	145	170	44	101	126	21	14	30	14	16	22
32	172	197	145	170	44	101	126	27	14	30	14	16	22
40	174	199	147	172	46	101	126	27	14	32	14	16	24

Bore/Symbol	I	J	K	L	M	P	Q	R	S	U	V	W	X	AR	AX	AY
16	10	5	M6x1.0	M16x1.5	14	6	12	14	9	21	6	5	M5x0.8	6	26.6	23
20	13	6	M8x1.25	M22x1.5	10	8	16	19	12	27	8	6	Rc1/8	7	37	32
25	17	6	M10x1.25	M22x1.5	12	8	16	19	12	30	10	8	Rc1/8	6	37	32
32	17	6	M10x1.25	M24x2.0	12	10	16	25	15	35	12	10	Rc1/8	8	41.6	36
40	17	7	M12x1.25	M30x2.0	12	12	20	25	15	41.6	16	14	Rc1/8	9	52	45

CNT-Spring extend

Standard (pivot)-B

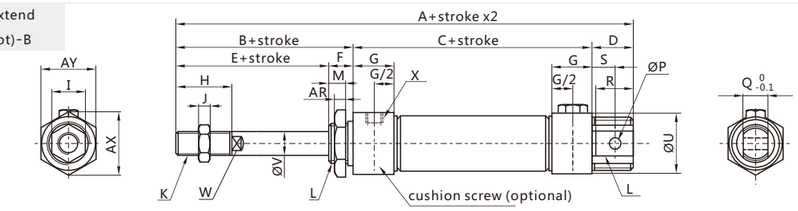

Round-end-M

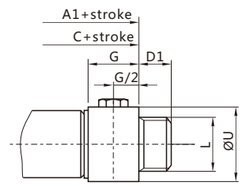

Flat-end-U

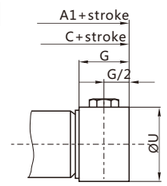

Symbol	A		A1		B	C		D	D1	E	F
Bore/Stroke	≤50	≤100	≤50	≤100		≤50	≤100				
16	139	164	123	148	38	85	110	16	16	22	16
20	162	187	141	166	40	101	126	21	12	28	12
25	166	191	145	170	44	101	126	21	14	30	14
32	172	192	145	165	44	101	121	27	14	30	14
40	174	204	147	177	46	101	131	27	14	32	14

Bore/Symbol	G	H	I	J	K	L	M	P	Q	R	S	U	V	W	X	AR	AX	AY
16	10	16	10	5	M6x1.0	M16x1.5	14	6	12	14	9	21	6	5	M5x0.8	6	26	6 23
20	16	20	13	6	M8x1.25	M22x1.5	10	8	16	19	12	27	8	6	Rc1/8	7	37	32
25	16	22	17	6	M10x1.25	M22x1.5	12	8	16	19	12	30	10	8	Rc1/8	6	37	32
32	16	22	17	6	M10x1.25	M24x2.0	12	10	16	25	15	35	12	10	Rc1/8	8	41	6 36
40	16.7	24	17	7	M12x1.25	M30x2.0	12	12	20	25	15	41.6	16	14	Rc1/8	9	52	45

■ Dimensions (mm)

CNRU/CNRU-A (Upper mount)

Φ20~Φ40

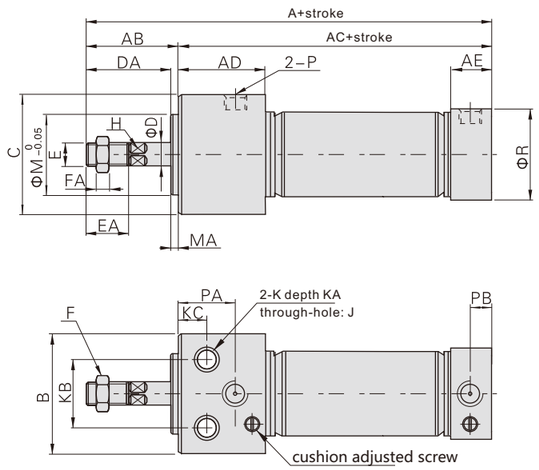

Bore	A	AB	AC	AD	AE	B	C	D	DA	E	EA	F	FA
20	120	31	89	29	16	33.5	30.5	8	28	M8×1.25	20	13	5
25	122	33	89	29	16	36.5	36.5	10	30	M10×1.25	22	17	6
32	122	33	89	29	16	42.5	42.5	12	30	M10×1.25	22	17	6
40	132	35	97.5	37.5	16	52.5	52.5	16	32	M14×1.5	24	19	8

Bore	H	J	K	KA	KB	KC	M	MA	P	PA	PB	R
20	6	Φ5.5	Φ9.5	6.5	21	12	20	3	1/8	22	8	27
25	8	Φ6.5	Φ11.0	7.5	25	12	26	3	1/8	22	8	30
32	10	Φ9.0	Φ14.0	10	30	12	26	3	1/8	22	8	35
40	14	Φ11	Φ17.5	12.5	38	12	32	3	1/8	27	8	41.5

CNRU-A

Φ50/Φ63

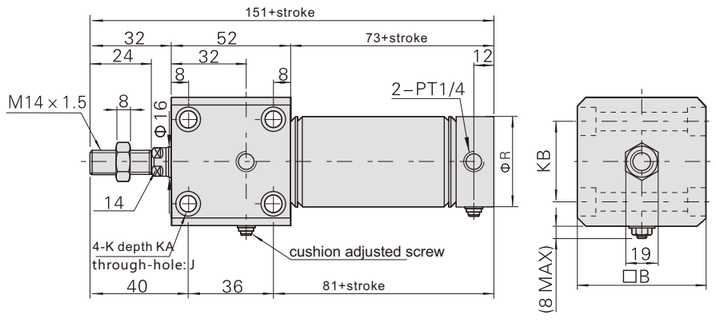

Bore	B	J	K	KA	KB	R
50	62	Φ6.5	Opposite side Φ11.0	6.5	44	53
63	74	Φ9.0	Opposite side Φ14.0	8.5	48	67

CN Series Mini Cylinder
harhesh

■ Dimensions (mm)

CNRF/CNRF-A (Front mount)

Φ20~Φ40

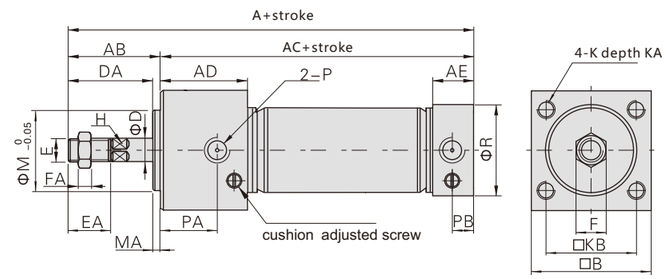

Bore	A	AB	AC	AD	AE	C	D	DA	E	EA
20	120	31	89	29	16	30.5	8	28	M8×1.25	20
25	122	33	89	29	16	36.5	10	30	M10×1.25	22
32	122	33	89	29	16	42.5	12	30	M10×1.25	22
40	132	35	97.5	37.5	16	52.5	16	32	M14×1.5	24

Bore	F	FA	H	K	KA	KB	M	MA	P	PA	PB	R
20	13	5	6	M5×0.8	9	22	20	3	1/8	22	8	27
25	17	6	8	M6×1.0	11	26	26	3	1/8	22	8	30
32	17	6	10	M6×1.0	11	30	26	3	1/8	22	8	35
40	19	8	14	M8×1.25	14	36	32	3	1/8	27	8	41.5

CNRF-A

Φ50/Φ63

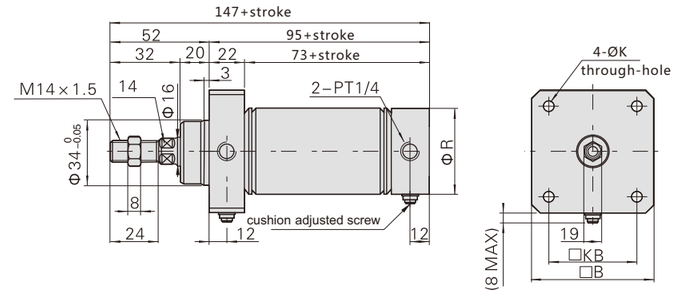

Bore	A	B	C	D	E	F
50	191.5	11.5	94	30	36.5	14
63	216.5	11.5	105	35	42.5	16

■ Dimensions (mm)

CND/CND-A (Double rod/Double rod air cushion)

Ø16~Ø40

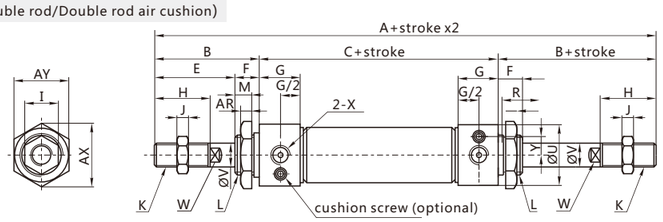

Ø50~Ø63

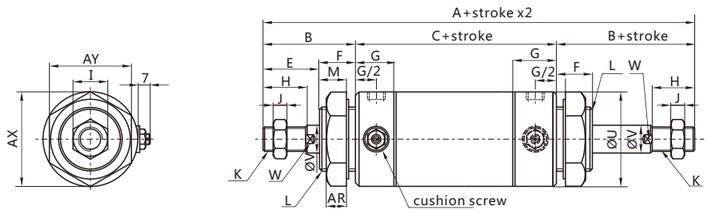

Bore/Symbol	A	B	C	E	F	G	H	I	J	K	L	M	U	V	W	X	AR	AX	AY	Y
16	136	38	60	22	16	10	16	10	5	M6x1.0	M16x1.5	14	21	6	5	M5x0.8	6	26.6	23	6.5
20	156	40	76	28	12	16	20	13	6	M8x1.25	M22x1.5	10	27	8	6	Rc1/8	7	37	32	9.2
25	164	44	76	30	14	16	22	17	6	M10x1.25	M22x1.5	12	30	10	8	Rc1/8	6	37	32	9.2
32	164	44	76	30	14	16	22	17	6	M10x1.25	M24x2.0	12	35	12	10	Rc1/8	8	41.6	36	11.5
40	168	46	76	32	14	16.7	24	17	7	M12x1.25	M30x2.0	12	41.6	16	14	Rc1/8	9	52	45	15
50	199	52	95	32	20	23	24	19	8	M14x1.5	M36x2.0	15	53	16	14	Rc1/4	11	57.7	50	19.5
63	199	52	95	32	20	23	24	19	8	M14x1.5	M36x2.0	15	67	16	14	Rc1/4	11	57.7	50	20.5

CNJ/CNJ-A (Adjustable stroke/Adjustable stroke air cushion)

Ø16~Ø40

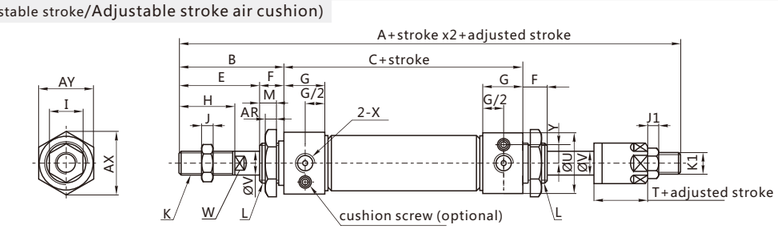

Ø50~Ø63

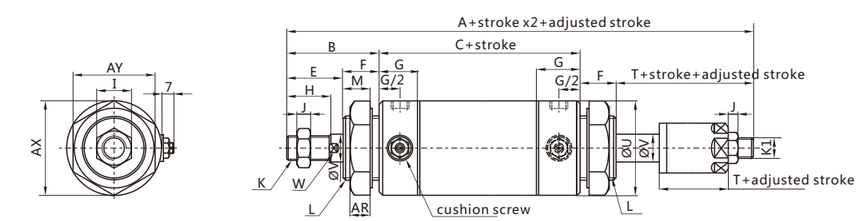

Bore/Symbol	A	B	C	E	F	G	H	I	J	J1	K	K1
16	135	38	60	22	16	10	16	10	5	5	M6X1.0	M6X1.0
20	152	40	76	28	12	16	20	13	6	5	M8X1.25	M8X1.25
25	161	44	76	30	14	16	22	17	6	6	M10X1.25	M10X1.25
32	161	44	76	30	14	16	22	17	6	6	M10X1.25	M10X1.25
40	164	46	76	32	14	16.7	24	17	7	7	M12X1.25	M12X1.25
50	195	52	95	32	20	23	24	19	8	7	M14X1.5	M12X1.25
63	195	52	95	32	20	23	24	19	8	7	M14X1.5	M12X1.25

Bore/Symbol	L	M	U	V	W	X	AR	AX	AY	Y	T
16	M16X1.5	14	21	6	5	M5X0.8	6	26.6	23	6.5	21
20	M22X1.5	10	27	8	6	Rc1/8	7	37	32	9.2	24
25	M22X1.5	12	30	10	8	Rc1/8	6	37	32	9.2	27
32	M24X2.0	12	35	12	10	Rc1/8	8	41.6	36	11.5	27
40	M30X2.0	12	41.6	16	14	Rc1/8	9	52	45	15	28
50	M36X2.0	15	53	16	14	Rc1/4	11	57.7	50	19.5	28
63	M36X2.0	15	67	16	14	Rc1/4	11	57.7	50	20.5	28

CN Series Mini Cylinder
harhesh

■ Dimensions (mm)

Foot mount

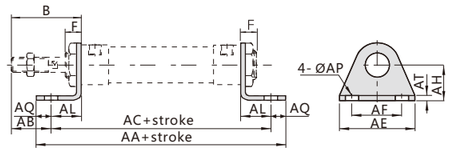

code	Symbol / Stroke / Bore	AA (CN)	AA(CNS) 0~50	AA(CNS) 51~100	AC (CN)	AC (CNS) 0~50	AC (CNS) 51~100	B	F	AB	AE	AF	AL	AQ	AP	AT	AH
CN-L016	16	98	123	148	86	111	136	38	16	25	44	32	13	6	5.5	3	20
CN-L020	20	122	147	172	106	131	156	40	12	25	54	40	15	8	6.5	3	25
	25	122	147	172	106	131	156	44	14	29	54	40	15	8	6.5	3	25
CN-L032	32	142	167	192	126	151	176	44	14	19	59	45	25	8	6.5	4	32
CN-L040	40	142	167	192	126	151	176	46	14	21	64	50	25	8	6.5	4	36

Note: contains 2 foot stands and 1 nut.

Flange mount

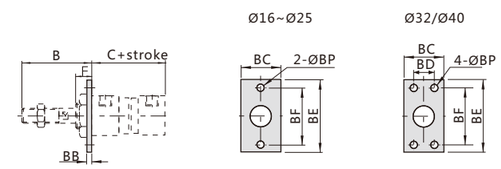

code	Symbol / Stroke / Bore	B	C (CN)	C (CNS) 0~50	C (CNS) 51~100	B	BC	BD	BE	BF	BP	F
CN-F016	16	38	60	85	110	3	26	-	52	40	5.5	16
CN-F020	20	40	76	101	126	4	38	-	64	50	5.5	12
	25	44	76	101	126	4	38	-	64	50	6.5	14
CN-F032	32	44	76	101	126	4	47	33	72	58	6.5	14
CN-F040	40	46	76	101	126	4	50	36	84	70	6.5	14

Note: contains 1 flange

End bracket mount

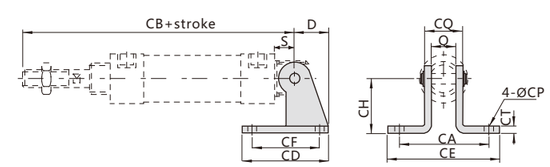

code	Symbol / Stroke / Bore	D	S	Q	CA	CB (CN)	CB (CNS) 0~50	CB (CNS) 51~100	CD	CE	CF	CH	CT	CP	CQ
CN-E016	16	16	9	12	-	107	132	157	23	-	12	20	2	5.5	16
CN-E020	20	21	12	16	51	128	153	178	48	67	32	32	3	6.5	22
	25	21	12	16	51	132	157	182	48	67	32	32	3	6.5	22
CN-E032	32	27	15	16	51	135	160	185	52	67	36	36	4	6.5	24
CN-E040	40	27	15	20	55	137	162	187	56	71	40	40	4	6.5	28

Product feature

Implement ISO 15552 standard.
Built-in rod improved its strength and load capacity.
Advanced polyurethane improved its friction resistance.
Using advanced grease to ensure its life.

Symbol

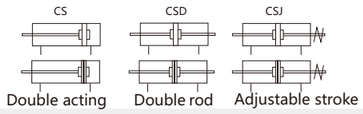

Specifications

Bore size (mm)	32	40	50	63	80	100	125	160	200	250	320
Action	Double acting										
Fluid	Compressed air										
Pressure range	0.1～0.9MPa										
Proof pressure	1.35MPa										
Temp. range	－10～60℃										
Speed range	50～800mm/s										
Cushion	Adjustable air cushion										
Cushion length	23mm	27mm	30mm		36mm		42mm	40mm	44mm	60mm	65mm
Lubrication	Non-lube										
Port size	Rc1/8	Rc1/4		Rc3/8		Rc1/2		Rc3/4		Rc1	
Code of S/K	CG32-R1	CG40-R1	CG50-R1	CG63-R1	CG80-R1	CG100-R1	CG125-R1	CG160-R1	CG200-R1	CG250-R1	CG320-R1

* Please use ISOVG32 oil if needed.

Stroke/Auto switch model

Bore (mm)	Standard stroke（mm）	Max.	Switch model	Mount code
32	25 50 75 100 125 150 175 200 250 300 400 500	1000	KTX-21R KTX-21P	CG-1
40	25 50 75 100 125 150 175 200 250 300 400 500 600 700 800	1200		
50	25 50 75 100 125 150 175 200 250 300 400 500 600 700 800 900 1000	1200		CG-2
63	25 50 75 100 125 150 175 200 250 300 400 500 600 700 800 900 1000	1500		
80	25 50 75 100 125 150 175 200 250 300 400 500 600 700 800 900 1000	1500		CG-3
100	25 50 75 100 125 150 175 200 250 300 400 500 600 700 800 900 1000	1500		
125	25 50 75 100 125 150 175 200 250 300 400 500 600 700 800 900 1000	1500		CG-4
160	25 50 75 100 125 150 175 200 250 300 400 500 600 700 800 900 1000	1800		CG-5
200	25 50 75 100 125 150 175 200 250 300 400 500 600 700 800 900 1000	1800		
250	25 50 75 100 125 150 175 200 250 300 400 500 600 700 800 900 1000	1800	—	
320	25 50 75 100 125 150 175 200 250 300 400 500 600 700 800 900 1000	1800		

* Non-standard stroke is available, contact us if any special requirement.

Ordering code

CG D 50 - 100 - 20 - S - L

Series

Null	Single rod
D	Double rod
J	Adjustable stroke

Bore

Stroke

Adjustable stroke

Code	Stroke
10	10mm
20	20mm
30	30mm
40	40mm
50	50mm
75	75mm
100	100mm

Note: this option only for CGJ.

Magnet

Null	Without magnet
S	Magnet

Installation

Code	Installation
B	Standard
L	Axial foot
F	Rod side flange
G	Head side flange
C	Rear eye
D	Rear clevis
T	Center trunnion
FT	Rod side trunnion
DE	Rear clevis seat-joint

Note: no C. D. DE option for CGD and CGJ.

CG Series Standard Cylinder
harhesh

Dimensions (mm)

CG Standard

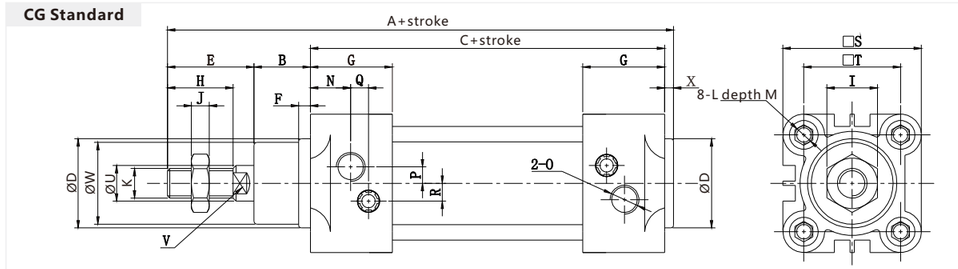

Bore	A	B	C	D	E	F	G	H	I	J	K	L	M
32	146.5	17	94	30	31	4	27.5	22	17	6	M10×1.25	M6	14
40	166.5	21	108	35	33	4	29.5	24	17	7	M12×1.25	M6	14
50	182.5	27	109	40	42	4	32	32	23	8	M16×1.5	M8	14
63	197.5	27	124	45	42	4	36	32	23	8	M16×1.5	M8	14
80	221	35	130	45	51	4	37	40	26	10	M20×1.5	M10	18
100	237	38	141	55	53	4	39	40	26	10	M20×1.5	M10	18
125	285	46	160	60	73	6	45	54	40	13.5	M27×2	M12	20
160	338	55	180	65	97	10	50	72	50	14	M36×2	M16	23.5
200	355	65	180	75	102	25	50	72	50	14	M36×2	M16	23.5
250	389	75	200	90	114	25	60	84	55	14	M42×2	M20	25.5
320	440	90	220	110	120	25	65	90	60	14	M48×2	M24	28.5

Bore	N	O	P	Q	R	S	T	U	V	W	X
32	13.5	Rc1/8	5	3.5	6	47	32.5	12	10	28	4.5
40	17.5	Rc1/4	6	3	8	54.5	38	16	14	33	4.5
50	15.5	Rc1/4	8.5	5	10	65.5	46.5	20	17	38	4.5
63	17.5	Rc3/8	7	7.5	12	77.8	56.5	20	17	40	4.5
80	16	Rc3/8	10	8.5	15	95.5	72	25	22	43	5
100	21.5	Rc1/2	12	8	16	115.5	89	25	22	47	5
125	22.5	Rc1/2	14	8	18	143	110	32	27	58	6
160	25.5	Rc3/4	15	7	15	180	140	40	36	62	6
200	25.5	Rc3/4	15	8.5	15	220	175	40	36	70	8
250	30	Rc1	25	10	25	270	220	50	46	85	8
320	30	Rc1	35	15	35	350	270	63	55	100	10

CGD Standard

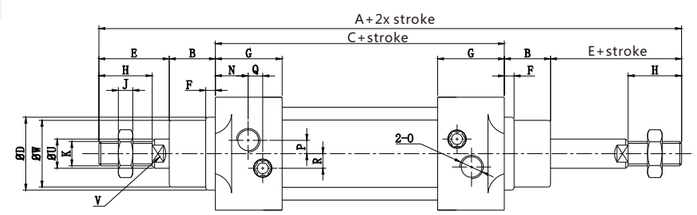

Bore	A	B	C	D	E	F	G	H	J	K	N	O	P	Q	R	U	V	W
32	190	17	94	30	31	4	27.5	22	6	M10×1.25	13.5	Rc1/8	5	3.5	6	12	10	28
40	216	21	108	35	33	4	29.5	24	7	M12×1.25	17.5	Rc1/4	6	3	8	16	14	33
50	247	27	109	40	42	4	32	32	8	M16×1.5	15.5	Rc1/4	8.5	5	10	20	17	38
63	262	27	124	45	42	4	36	32	8	M16×1.5	17.5	Rc3/8	7	7.5	12	20	17	40
80	302	35	130	45	51	4	37	40	10	M20×1.5	16	Rc3/8	10	8.5	15	25	22	43
100	323	38	141	55	53	4	39	40	10	M20×1.5	21.5	Rc1/2	12	8	16	25	22	47
125	398	46	160	60	73	6	45	54	13.5	M27×2	22.5	Rc1/2	14	8	18	32	27	58
160	484	55	180	65	97	10	50	72	14	M36×2	25.5	Rc3/4	15	7	15	40	36	62
200	514	65	180	75	102	25	50	72	14	M36×2	30	Rc3/4	15	8.5	15	40	36	70
250	578	75	200	90	114	25	60	84	14	M42×2	30	Rc1	25	10	25	50	46	88
320	640	90	220	110	120	25	65	90	14	M48×2	30	Rc1	35	15	35	63	55	100

■ Dimensions (mm)

CGJ Standard

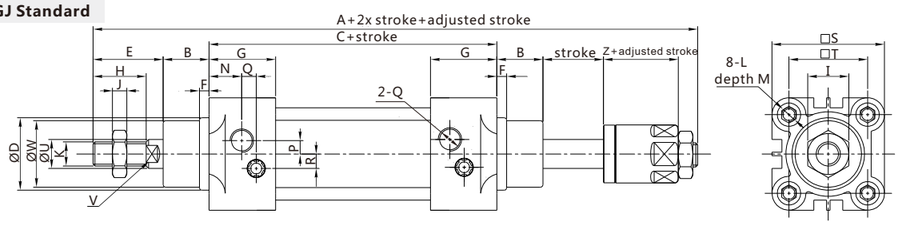

Bore	A	B	C	D	E	F	G	H	I	J	K	L	M
32	186	17	94	30	31	4	27.5	22	17	6	M10×1.25	M6	14
40	211	21	108	35	33	4	29.5	24	17	7	M12×1.25	M6	14
50	234	27	109	40	42	4	32	32	23	8	M16×1.5	M8	14
63	249	27	124	45	42	4	36	32	23	8	M16×1.5	M8	14
80	286.5	35	130	45	51	4	37	40	26	10	M20×1.5	M10	18
100	305.5	38	141	55	53	4	39	40	26	10	M20×1.5	M10	18
125	367.5	46	160	60	73	6	45	54	40	13.5	M27×2	M12	20
160	455	55	180	65	97	10	50	72	50	14	M36×2	M16	23.5
200	480	65	180	75	102	25	50	72	50	14	M36×2	M16	23.5
250	528	75	200	90	114	25	60	84	55	14	M42×2	M20	25.5
320	584	90	220	110	120	25	65	90	60	14	M48×2	M24	28.5

Bore	N	O	P	Q	R	S	T	U	V	W	Z
32	13.5	Rc1/8	5	3.5	6	47	32.5	12	10	28	21
40	17.5	Rc1/4	6	3	8	54.5	38	16	14	33	21
50	15.5	Rc1/4	8.5	5	10	65.5	46.5	20	17	38	21
63	17.5	Rc3/8	7	7.5	12	77.8	56.5	20	17	40	21
80	16	Rc3/8	10	8.5	15	95.5	72	25	22	43	25.5
100	21.5	Rc1/2	12	8	16	115.5	89	25	22	47	25.5
125	22.5	Rc1/2	14	8	18	143	110	32	27	58	29
160	25.5	Rc3/4	15	7	15	180	140	40	36	62	54
200	25.5	Rc3/4	15	8.5	15	220	175	40	36	70	54
250	30	Rc1	25	10	25	270	220	50	46	85	50
320	30	Rc1	35	15	35	350	270	63	55	100	50

Foot mount

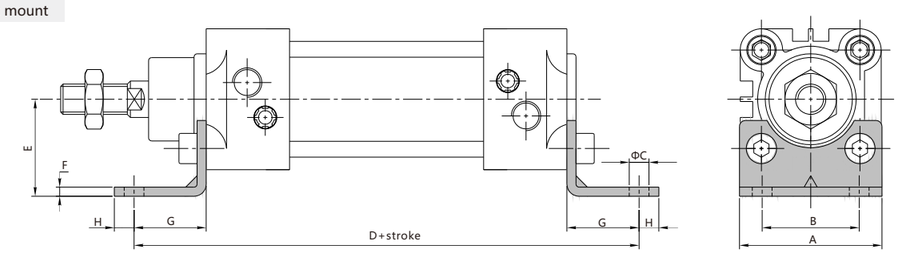

code	A	B	C	D	E	F	G	H
CG-L032	47	32	7	142	32	3	24	8
CG-L040	53	36	9	164	36	3	28	9
CG-L050	65	45	9	173	45	3	32	10
CG-L063	75	50	9	188	50	3	32	12
CG-L080	95	63	12.5	212	63	4	41	19
CG-L100	115	75	14.5	231	71	4	45	19
CG-L125	140	90	16.5	250	90	8	45	20
CG-L160	180	115	18.5	300	115	8	60	20
CG-L200	220	135	24	320	135	9	70	30
CG-L250	280	165	26	350	165	14	75	40
CG-L320	353	200	32	390	200	16	85	45

Note: contains 2 foot stands and 4 screws.

CG Series Standard Cylinder
harhesh

■ Dimensions (mm)

Flange mount

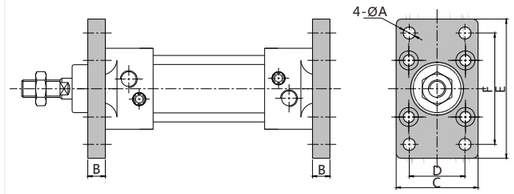

code	A	B	C	D	E	F
CG-F032	7	10	47	32	80	64
CG-F040	9	10	53	36	90	72
CG-F050	9	12	65	45	108	90
CG-F063	9	12	75	50	118	100
CG-F080	12.5	16	95	63	150	126
CG-F100	14.5	16	115	75	176	150
CG-F125	16.5	20	139	90	218	180
CG-F160	18.5	20	180	115	280	230
CG-F200	24	25	220	135	320	270
CG-F250	26	25	280	165	395	330
CG-F320	33	30	353	200	475	400

Note: contains 1 flange and 4 screws.

Rear eye

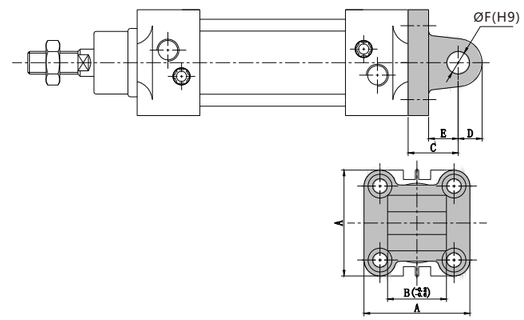

code	A	B	C	D	E	F
CG-C032	47	26	22	10.5	13	10
CG-C040	54.5	28	25	12	16	12
CG-C050	65.5	32	27	12	17	12
CG-C063	77.8	40	32	15	22	16
CG-C080	95.5	50	36	15.5	22	16
CG-C100	115.5	60	41	20	27	20
CG-C125	143	70	50	24	33	25
CG-C160	180	90	55	30	35	30
CG-C200	220	90	60	30	36	30
CG-C250	280	110	70	41	46	40
CG-C320	353	120	80	46	52	45

Rear clevis

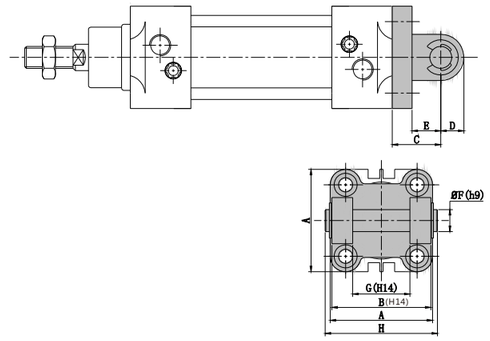

code	A	B	C	D	E	F	G	H
CG-D032	47	45	22	10.5	13	10	26	51
CG-D040	54.5	52	25	12	16	12	28	59
CG-D050	65.5	60	27	12	17	12	32	67
CG-D063	77.8	70	32	15.5	22	16	40	78
CG-D080	95.5	90	36	16	22	16	50	98
CG-D100	115.5	110	41	20	27	20	60	120
CG-D125	143	130	50	24	33	25	70	140
CG-D160	180	170	55	60	35	30	90	181
CG-D200	220	170	60	60	36	30	90	181
CG-D250	280	200	70	70	46	40	110	220
CG-D320	353	220	80	80	52	45	120	240

Center trunnion

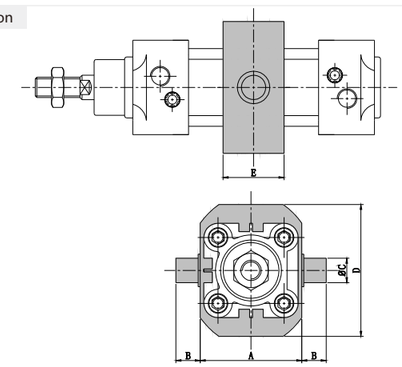

code	A	B	C	D	E
CG-T032	50	12	12	65	30
CG-T040	63	16	16	75	32
CG-T050	75	16	16	71	21
CG-T063	90	20	20	88	27
CG-T080	110	20	20	110	32
CG-T100	132	25	25	136	38
CG-T125	160	25	25	155	40
CG-T160	200	32	32	203	38
CG-T200	250	32	32	250	50
CG-T250	320	40	40	320	60
CG-T320	400	50	50	400	70

CG Series Standard Cylinder

■ Dimensions (mm)

Rear clevis seat-joint

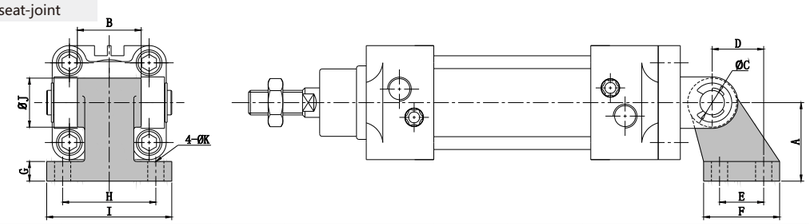

code	A	B	C	D	E	F	G	H	I	J	K
CG-E032	32	26	10	21	18	31	8	38	51	20	6.6
CG-E040	36	28	12	24	22	35	10	41	54	22	6.6
CG-E050	45	32	12	33	30	45	12	50	65	24	9
CG-E063	50	40	16	37	35	50	12	52	67	30	9
CG-E080	63	50	16	47	40	60	14	66	86	30	11
CG-E100	71	60	20	55	50	70	15	76	96	38	11
CG-E125	90	70	25	70	60	90	20	94	124	48	14
CG-E160	115	90	30	97	88	126	25	118	156	58	14
CG-E200	135	90	30	105	90	130	30	122	162	58	18

Rod side turnnion

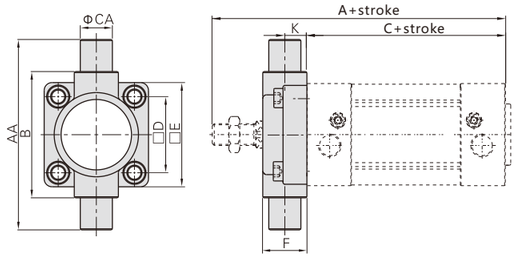

code	Bore	A	C	AA	B	CA	D	E	F	K
CG-FT032	32	142	94	74	50	12	32.5	46	19	10
CG-FT040	40	162	108	95	63	16	38	52	21	10
CG-FT050	50	178	109	107	75	16	46.5	64	26	12
CG-FT063	63	193	124	130	90	20	56.5	74	28	12
CG-FT080	80	216	130	150	110	20	72	94	31	16
CG-FT100	100	232	141	182	132	25	89	114	35	16
CG-FT125	125	279	160	210	160	25	110	139	43	20
CG-FT160	160	332	180	264	200	32	140	179	56	20
CG-FT200	200	347	180	314	250	32	175	218	64	20

Trunnion seat-joined

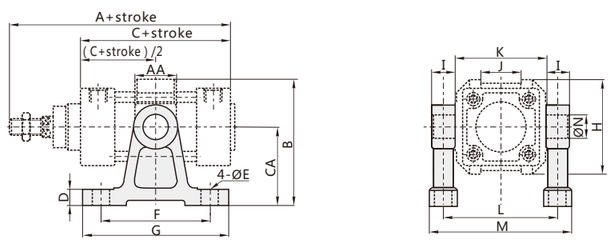

code	Bore	A	C	AA	B	CA	D	E	F	G	H	I	J	K	L	M	N
CG-S032	32	142	94	22	66	40	11	9	60	80	52	12	20	50	62	77	12
CG-S050	40	162	108	28	86.5	54	11	12	75	100	65	16	27	63	79	98	16
CG-S050	50	178	109	28	91.5	54	11	12	75	100	75	16	31	75	91	110	16
CG-S080	63	193	124	30	115	70	11	12	85	110	90	20	42	90	110	133	20
CG-S080	80	216	130	32	126	70	11	12	85	110	112	20	54	110	130	153	20
CG-S125	100	232	141	38	157.5	90	19	18	115	155	135	25	68	132	157	185	25
CG-S125	125	279	160	40	175	90	19	18	115	155	170	25	80	160	185	213	25
CG-S160	160	332	180	50	215	110	24	22	140	190	210	32	100	200	232	267	32
CG-S200	200	347	180	50	262.5	135	27	22	150	200	255	32	125	250	282	317	32

Note: contains left and right seat-joined per bag.

Product feature

Small axial size, compact structure, nice appearance, direct-assembly.

Symbol

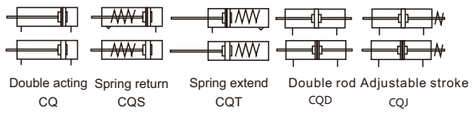

Specification

Bore Φ (mm)	12	16	20	25	32	40	50	63	80	100
Action	double acting, single acting(spring return or extend)								double acting	
Fluid	Compressed air									
Pressure range	double acting : 0.1~1.0MPa , single acting : 0.2~1.0MPa									
Proof pressure	1.5MPa									
Temp.range	-10~60℃(no freezing)									
Speed range	50~500mm/s									
Material of body	Aluminum alloy									
Installation	Through hole with female thread									
Port size	M5X0.8				Rc1/8		Rc1/4		Rc3/8	
code of S/K	CB12-R1	CQ16-R1	CQ20-R1	CQ25-R1	CQ32-R1	CB40-R1	CB50-R1	CB63-R1	CB80-R1	CB100-R1

Please use ISOVG32 oil if needed

Stroke/Auto switch type

Bore (mm)		Standard Stroke (mm)	Max. (mm)	allowance Stroke		Switch model
				magnet	without magnet	
12	double	5 10 15 20 25 30 35 40 45 50	50	60	60	KTX-06R KTX-06P
	single	5 10 15 20 25 30	30	—	—	
16	double	5 10 15 20 25 30 35 40 45 50 60	60	70	70	
	single	5 10 15 20 25 30	30	—	—	
20 25	double	5 10 15 20 25 30 35 40 45 50 60 70 75 80 90 100	100	100	100	
	single	5 10 15 20 25 30	30	—	—	
32 40 50 63	double	5 10 15 20 25 30 35 40 45 50 60 70 75 80 90 100	100	100	100	
	single	5 10 15 20 25 30	30	—	—	
80 100	double	5 10 15 20 25 30 35 40 45 50 60 70 75 80 90 100	30	—	—	

*Non-standard stroke is available, contact us if any special requirement。

Ordering Code

CQ D 16 - 30 - 10 - S - B - M

Series

Acting

Null	Double acting
D	Double rod
J	Adjustable stroke
S	Spring return
T	Spring extend

Bore

Stroke

Adjustable stroke

10	10mm
20	20mm
30	30mm
40	40mm
50	50mm
75	75mm
100	100mm

Note : CQ, CQS, CQT, CQD no this option

Magnet

Null	Without magnet
S	Magnet

Thread

Null	Female
M	Male

Installation

B	Standard
F	Rod side flange
G	Head side flage
D	Rear clevis
L	Foot

CQ Series Compact Cylinder
harhesh

Dimensions(mm)

Compact cylinder:CQ series
Standard (Double acting)

Ø12~Ø20

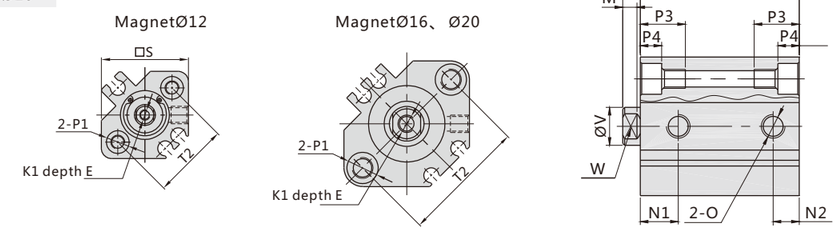

Ø12~Ø20

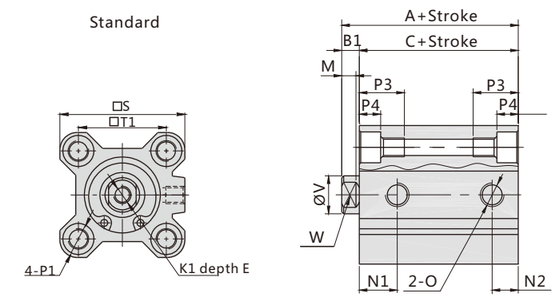

Ø25

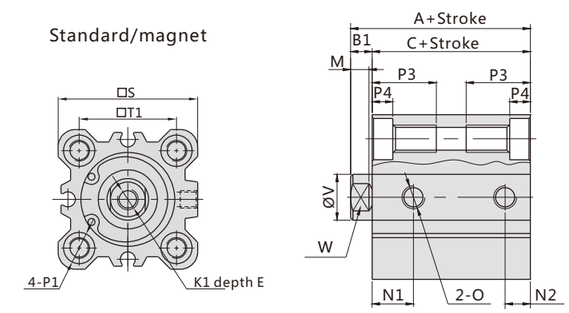

Type / symbol / bore	Standard A strokeS50	Standard A stroke≥60	Standard C strokeS50	Standard C stroke≥60	N1	N2	magnet A	magnet C	magnet N1	magnet N2	B1	D	E	M
12	20.5	—	17	—	7.5	5	31.5	28	9	7	3.5	—	6	3
16	22	—	18.5	—	8	5.5	34	30.5	9.5	5.5	3.5	—	8	3
20	24	34	19.5	29.5	9	5.5	36	31.5	9.5	5.5	4.5	—	7	3.5
25	27.5	37.5	22.5	32.5	11	5.5	37.5	32.5	11	5.5	5	—	12	4

Bore	K1	O	P1	P3	P4	S	T1	T2	V	W
12	M3×0.5	M5×0.8	counterbore : Ø6.5 thread : M4×0.7through-hole : Ø3.5	11	3.5	25	15.5	22	6	5
16	M4×0.7	M5×0.8	counterbore : Ø6.5 thread : M4×0.7through-hole : Ø3.4	11	3.5	29	20	28	8	6
20	M5×0.8	M5×0.8	counterbore : Ø9.0 thread : M6×1.0through-hole : Ø5.2	17	7	36	25.5	36	10	8
25	M6×1.0	M5×0.8	counterbore : Ø9.0 thread : M6×1.0through-hole : Ø5.3	17	7	40	28	-	12	10

■ Dimensions (mm)

Compact Cylinder: CQ series
Standard (Double acting)

Ø32~100(stroke≤100)

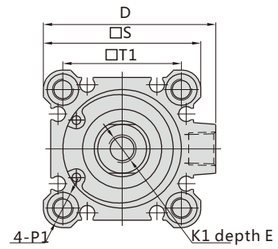

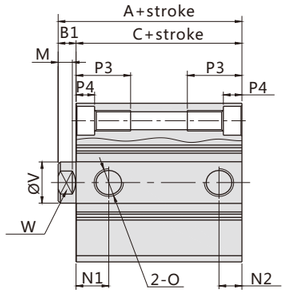

Type		Standard						Magnet				B1	D	E	M
Symbol / bore		A		C		N1	N2	A	C	N1	N2				
		Stroke≤30	Stroke≥35	Stroke≤30	Stroke≥35										
32	stroke=5	30	40	23	33	7.5	6.5	40	33	10	7.5	7	49.5	13	5.5
	stroke>5					10	7.5								
40		36.5		29.5		11	8	46.5	39.5	11	8	7	57	13	6
50	stroke=5	38.5		30.5		9	9	48.5	40.5	10.5	10.5	8	71	15	6
	stroke>5					10.5	10.5								
63	stroke=5	44		36		14	9.5	54	46	15	10.5	8	84	15	6
	stroke>5					15	10.5								
80		53.5		43.5		16	14	63.5	53.5	16	14	10	104.4	20	8
100		65		53		20	15	65	53	20	15	12	123.5	26	9

Bore	K1	O	P1	P3	P4	S	T1	T2	V	W
32	M8×1.25	Rc1/8	Counterbore : Ø9 Thread : M6×1.0Through-hole :Ø5.2	17	7	45.2	34	—	16	14
40	M8×1.25	Rc1/8	Counterbore : Ø9 Thread : M6×1.0Through-hole:Ø5.2	17	7	52.2	40	—	16	14
50	M10×1.5	Rc1/4	Counterbore : Ø11 Thread : M8×1.25Through-hole : Ø6.7	22	8	64	50	—	20	17
63	M10×1.5	Rc1/4	Counterbore : Ø14 Thread : M10×1.5Through-hole : Ø8 .7	28.5	10.5	77	60	—	20	17
80	M16×2.0	Rc3/8	Counterbore : Ø17.5 Thread : M12×1.75Through-hole : Ø10.3	35.5	13.5	98	77	—	25	22
100	M20×2.5	Rc3/8	Counterbore : Ø17.5 Thread : M12×1.75Through-hole : Ø10.7	35.5	13.5	117	94	—	32	27

Note : The non-standard cylinder is modified using upper level cylinder. Eg. the cylinder with 47mm stroke is modified using 50mm stroke cylinder, so the dimensions will be same.

Piston male thread

Bore : Ø12~100、Stroke≤100

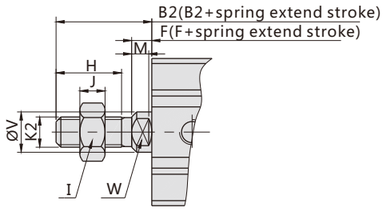

Bore	B2	F	H	I	J	K2	M	V	W
12	14	3.5	8.5	8	4	M5×0.8	3	6	5
16	15.5	3.5	10	10	5	M6×1.0	3	8	6
20	18.5	4.5	12	13	5	M8×1.25	3.5	10	8
25	22.5	5	15	17	6	M10×1.25	4	12	10
32	28.5	5	20.5	19	8	M14×1.5	3.5	1 6	14
40	28.5	5	20.5	19	8	M14×1.5	4	16	14
50	33.5	5	26	27	11	M18×1.5	4	20	17
63	33.5	5	26	27	11	M18×1.5	3.5	20	17
80	43.5	8	32.5	32	13	M22×1.5	6	25	22
100	43.5	8	32.5	36	13	M26×1.5	5	32	27

CQ Series Compact Cylinder

■ Dimensions (mm)

Compact Cylinder : CQS, CQT series

Ø12~20

MagnetØ12

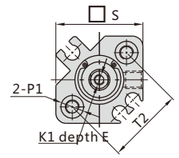

MagnetØ16~Ø20

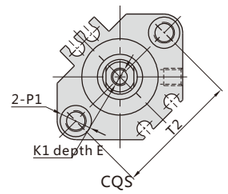

CQS

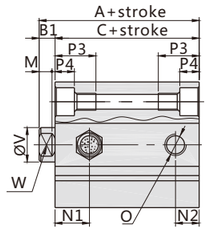

StandardØ12~Ø20

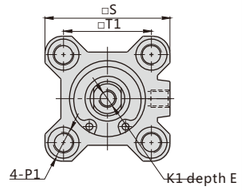

CQT

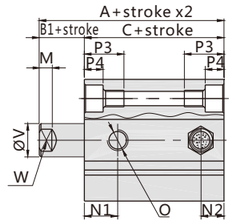

Ø25~63

Standard/MagnetØ25

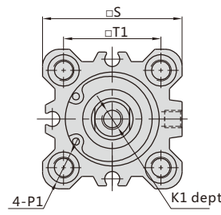

Standard/MagnetØ32~Ø63

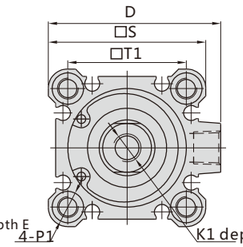

CQS

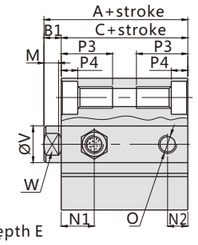

CQT

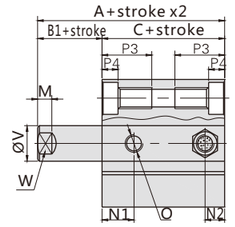

Bore		Standard								Magnet							
		A			C			N1	N2	A			C			N1	N2
		5/10	15/20	25/30	5/10	15/20	25/30			5/10	15/20	25/30	5/10	15/20	25/30		
12		30.5	40.5		27	37		7.5	5	41.5	51.5		38	48		7.5	5
16		32	42		28.5	38.5		8	5.5	44	54		40.5	50.5		9	5.5
20		34	44		29.5	39.5		9.5	5.5	46	56		41.5	51.5		9	5.5
25		37.5	47.5		32.5	42.5		11	5.5	47.5	57.5		42.5	52.5		11	5.5
32		50	60		43	53		10.5	7.5	50	60		43	53		10.5	7.5
40		46.5	56.5		39.5	49.5		11	8	56.5	66.5		49.5	59.5		11	8
50	S=5	48.5	58.5		40.5	50.5		9	9	58.5	68.5		50.5	60.5		10.5	10.5
	S > 5							10.5	10.5								
63	S=5	54	64		46	56		14	9.5	64	74		56	66		15	10.5
	S > 5							15	10.5								

Bore	B1	D	E	K1	O	P1	P3	P4	M	S	T1	T2	V	W
12	3.5	—	6	M3×0.5	M5×0.8	Counterbore : Ø6.5 Thread : M4×0.7 Through-hole : Ø3.5	11	3.5	3	25	15.5	22	6	5
16	3.5	—	8	M4×0.7	M5×0.8	Counterbore : Ø6.5 Thread : M4×0.7 Through-hole : Ø3.4	11	3.5	3	29	20	28	8	6
20	4.5	—	7	M5×0.8	M5×0.8	Counterbore : Ø9.0 Thread : M6×1.0 Through-hole : Ø5.2	17	7	3.5	36	25.5	36	10	8
25	5	—	12	M6×1.0	M5×0.8	Counterbore : Ø9.0 Thread : M6×1.0 Through-hole : Ø5.3	17	7	4	40	28	--	12	10
32	7	49.5	13	M8×1.25	Rc1/8	Counterbore : Ø9.0 Thread : M6×1.0 Through-hole : Ø5.2	17	7	5.5	45	34	—	16	14
40	7	57	13	M8×1.25	Rc1/8	Counterbore :Ø9.0 Thread : M6×1.0 Through-hole : Ø5.2	17	7	6	53	40	—	16	14
50	8	71	15	M10×1.5	Rc1/4	Counterbore : Ø11 Thread : M8×1.25 Through-hole : Ø6.8	22	8	6	64	50	—	20	17
63	8	84	15	M10×1.5	Rc1/4	Counterbore : Ø14 Thread : M10×1.5 Through-hole : Ø8.5	28.5	10.5	6	77	60	—	20	17

■ Dimensions (mm)

Compact Cylinder : CQD series

Ø12~20

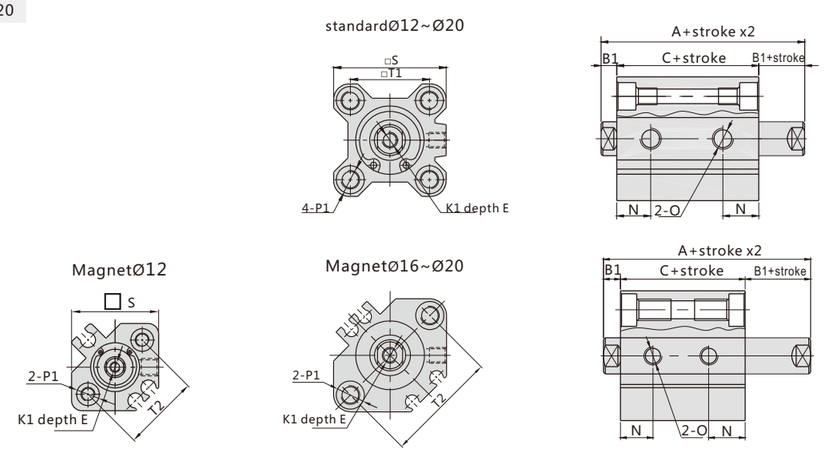

Ø25

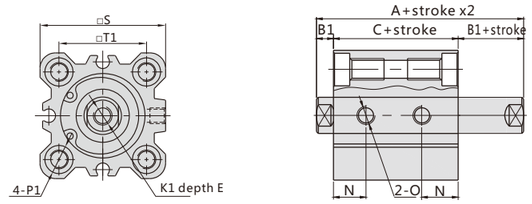

Ø32~Ø100

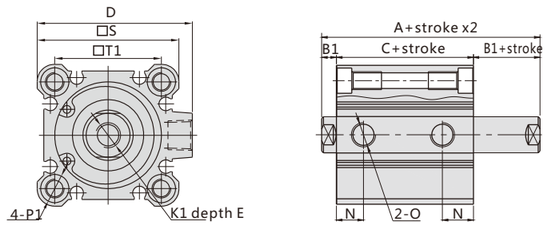

Bore	A		C		B1	E	N	O
	Standard	Magnet	Standard	Magnet				
12	32.2	39.4	25.2	32.4	3.5	6	9	M5×0.8
16	33	43	26	36	3.5	8	9.5	M5×0.8
20	35	47	26	38	4.5	7	9.5	M5×0.8
25	39	49	29	39	5	12	11	M5×0.8

Bore	A			C			B1	E	N	O
	Standard		Magnet	Standard		Magnet				
	≤30	≥35		≤30	≥35					
32	44.5		54.5	30.5		40.5	7	13	10	Rc1/8
40	54		64	40		50	7	13	13	Rc1/8
50	56.5		66.5	40.5		50.5	8	15	13.5	Rc1/4
63	58	68	68	42	52	52	8	15	14(St=5)/15.5(St>5)	Rc1/4
80	71	81	81	51	61	61	10	20	16	Rc3/8
100	84.5		84.5	60.5		60.5	12	26	21	Rc3/8

Note: the size without label is same as standard.

CQ Series Compact Cylinder
harhesh

■ Dimensions (mm)

Compact Cylinder : CQJ series

Ø12~20

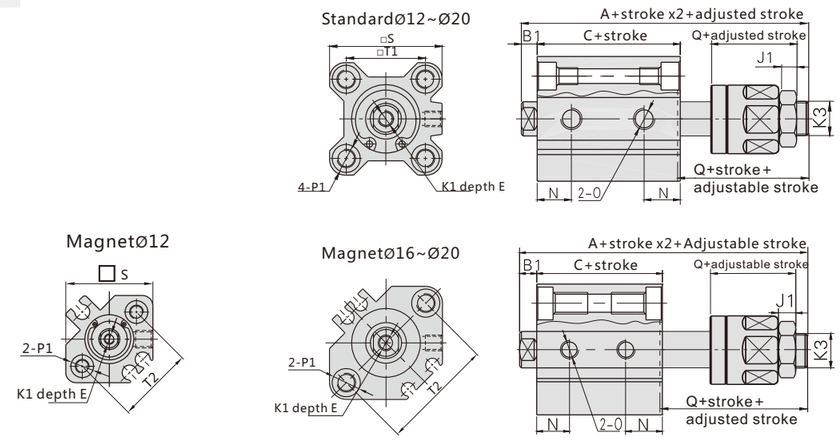

Ø25

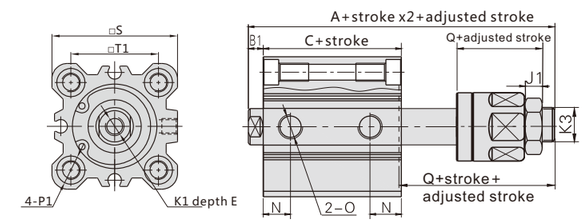

Ø32~Ø100

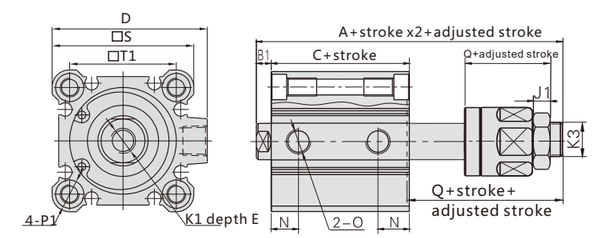

Bore	A		C		B1	E	N	Q	J1	K3
	Standard	Magnet	Standard	Magnet						
12	45.5	52.7	25.2	32.4	3.5	6	9	17	4	M5×0.8
16	50	60	26	36	3.5	8	9.5	21	5	M6×1.0
20	54.2	66.2	26	38	4.5	7	9.5	24	5	M8×1.25
25	60.5	70.5	29	39	5	12	11	27	6	M10×1.25

Bore	A			C			B1	E	N	Q	J1	K3
	Standard		Magnet	Standard		Magnet						
	≤30	≥35		≤30	≥35							
32	65.2		75.2	30.5		40.5	7	13	10	28	7	M12×1.25
40	74.5		84.5	40		50	7	13	13	28	7	M12×1.25
50	77		87	40.5		50.5	8	15	13.5	29	8	M16×1.5
63	78.5	88.5	88.5	42	52	52	8	15	15.5(14)	29	8	M16×1.5
80	96	106	106	51	61	61	10	20	16	35.5	10	M20×1.5
100	114.5		114.5	60.5		60.5	12	26	21	42.5	13.5	M27×2.0

■ Dimensions (mm)

Flange type

Ø12~Ø25

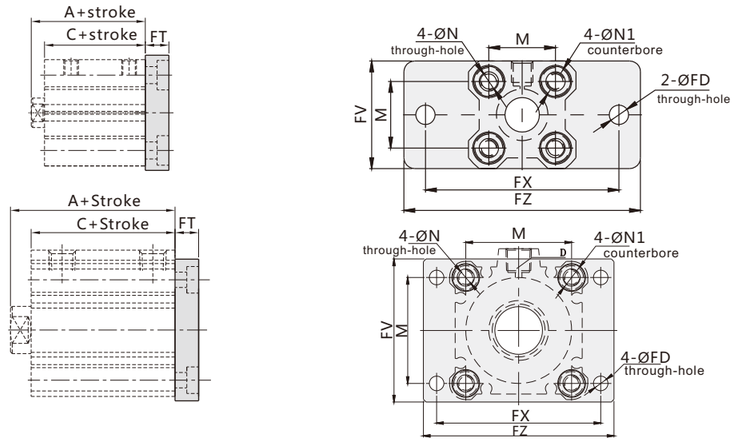

Ø32~Ø100

Note1) : Φ32 Size illustration
Standard Stroke≤30 A=30 C=23
Standard Stroke≥35 A=40 C=33

code	Symbol / Bore	A Standard ≤50	A Standard ≥60	A Magnet	C Standard ≤50	C Standard ≥60	C Magnet	M	N	N1	FD	FT	FV	FX	FZ
CQ-F012	12	20.5	–	31.5	17	–	28	15.5	4.5	7.5	4.5	5.5	25	45	55
CQ-F016	16	22	–	34	18.5	–	30.5	20	4.5	7.5	4.5	5.5	30	45	55
CQ-F020	20	24	34	36	19.5	29.5	31.5	25.5	6.5	10.5	6.5	8	39.5	48	60
CQ-F025	25	27.5	37.5	37.5	22.5	32.5	32.5	28	6.5	10.5	6.5	8	42	52	64
CQ-F032	32	Note1)	Note1)	40	Note1)	Note1)	33	34	6.5	10.5	5.5	8	48	56	65
CQ-F040	40	36.5		46.5	29.5		39.5	40	6.5	10.5	5.5	8	54	62	72
CQ-F050	50	38.5		48.5	30.5		40.5	50	8.5	13.5	6.5	9	67	76	89
CQ-F063	63	44		54	36		46	60	10.5	16.5	9	10	80	92	108
CQ-F080	80	53.5		63.5	43.5		53.5	77	12.5	18.5	11	12	99	116	134
CQ-F100	100	65		65	53		53	94	12.5	18.5	11	12	117	136	154

Rear clevis

Ø12~Ø25

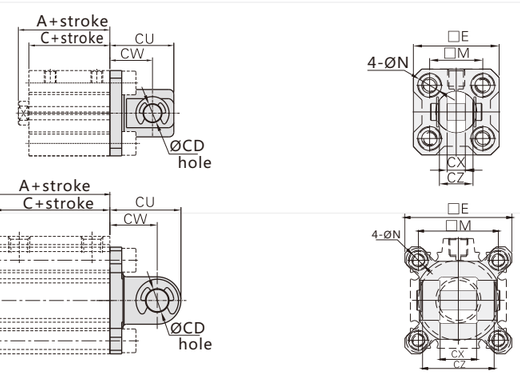

Ø32~Ø100

Note2) : Φ32 Size illustration
Standard Stroke≤30 A=30 C=23
Standard Stroke≥35 A=40 C=33

code	Symbol / Bore	A Standard ≤50	A Standard ≥60	A Magnet	C Standard ≤50	C Standard ≥60	C Magnet	E	M	N	CD	CU	CW	CX	CZ
CQ-D012	12	20.5	–	31.5	17	–	28	25	15.5	4.5	5	20	14	5.3	9.8
CQ-D016	16	22	–	34	18.5	–	30.5	29	20	4.5	5	21	15	6.8	11.8
CQ-D020	20	24	34	36	19.5	29.5	31.5	36	25.5	6.5	8	27	18	8.3	15.8
CQ-D025	25	27.5	37.5	37.5	22.5	32.5	32.5	40	28	6.5	10	30	20	10.2	19.8
CQ-D032	32	Note2)	Note2)	40	Note2)	Note2)	33	45.5	34	6.5	10	30	20	18.3	35.8
CQ-D040	40	36.5		46.5	29.5		39.5	53.5	40	6.5	10	32	22	18.2	35.8
CQ-D050	50	38.5		48.5	30.5		40.5	64.5	50	8.5	14	42	28	22.3	43.8
CQ-D063	63	44		54	36		46	77.5	60	10.5	14	44	30	22.3	43.8
CQ-D080	80	53.5		63.5	43.5		53.5	98.5	77	12.5	18	56	38	28.2	55.8
CQ-D100	100	65		65	53		53	117.5	94	12.5	22	67	45	32.2	63.8

CQ Series Compact Cylinder
harhesh

■ Dimensions (mm)

Foot type

Ø12~Ø25

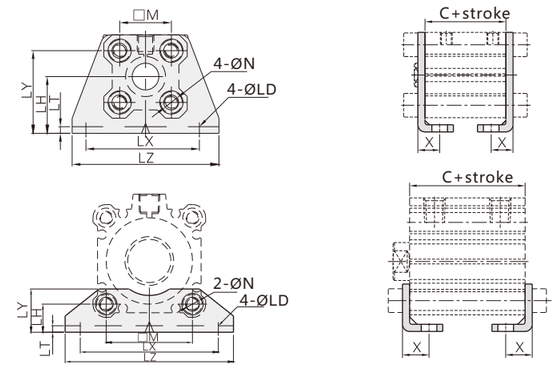

Ø32~Ø100

Note) : Φ32 Size illustration
Standard Stroke≤30 C=23
Standard Stroke≥35 C=33

code	Symbol / Bore	C Standard ≤50	C Standard ≥60	C Magnet	M	N	X	LD	LH	LT	LX	LY	LZ
CQ-L012	12	17	–	28	15.5	4.5	8	4.5	17	2	34	29.5	44
CQ-L016	16	18.5	–	30.5	20	4.5	8	4.5	19	2	38	33.5	48
CQ-L020	20	19.5	29.5	31.5	25.5	6.6	9.2	6.5	24	3	48	42	62
CQ-L025	25	22.5	32.5	32.5	28	6.6	10.7	6.5	26	3	52	46	66
CQ-L032	32	Note1)	Note1)	33	34	6.6	11.2	6.5	13	3	57	20	71
CQ-L040	40	29.5		39.5	40	6.6	11.2	6.5	13	3	64	20	78
CQ-L050	50	30.5		40.5	50	8.5	12.2	8.5	14	3	79	22	95
CQ-L063	63	36		46	60	10.5	13.7	10.5	16	3	95	26	113
CQ-L080	80	43.5		53.5	77	13	16.5	13	20.5	4.5	118	32	140
CQ-L100	100	53		53	94	13	23	13	24	6	137	36	162

I type connecting

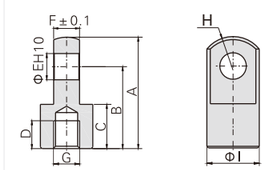

code	Suitable bore	A	B	C	D	E	F	G	H	I
CQ-I012	Ø12	21	16	9	6	5	4.7	M5×0.8	6.3	10
CQ-I016	Ø16	31	25	11	8	5	6.2	M6×1.0	8.1	12
CQ-I020	Ø20	33	25	13.5	8.5	8	7.7	M8×1.25	10.3	16
CQ-I025	Ø25	40	30	16	11	10	9.7	M10×1.25	12.8	20
CQ-I032	Ø32、Ø40	42	30	16	14	10	17.6	M14×1.5	12	22
CQ-I050	Ø50、Ø63	50	40	20	18	14	21.6	M18×1.5	16	28
CQ-I080	Ø80	70	50	23	21	18	27.6	M22×1.5	21	38
CQ-I100	Ø100	78	55	24	22	22	31.6	M26×1.5	24	44

Y type connecting

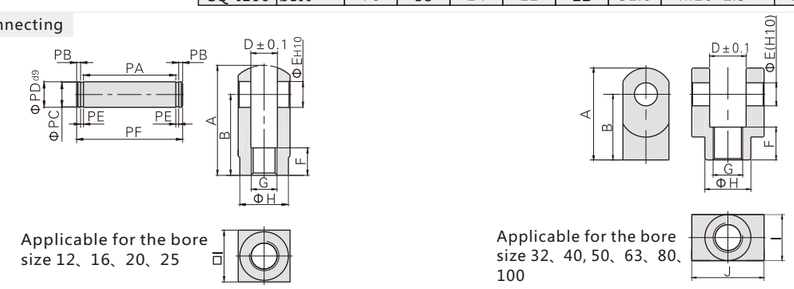

Applicable for the bore size 12、16、20、25

Applicable for the bore size 32、40, 50、63、80、100

code	Suitable bore	A	B	D	E	F	G	H	I	J	PA	PB	PC	PD	PE	PF
CQ-Y012	Ø12	22	16	5.3	5	6	M5×0.8	9	10	–	10.2	1.5	4	5	0.7	14.6
CQ-Y016	Ø16	28	21	6.6	5	11	M6×1.0	11	12	–	12.4	1.5	4	5	0.7	16.8
CQ-Y020	Ø20	34	25	8.3	8	8.5	M8×1.25	15	16	–	16.2	1.5	7	8	0.9	21
CQ-Y025	Ø25	41	30	10.3	10	10.5	M10×1.25	19	20	–	20.2	2	8	10	1.1	26.4
CQ-Y032	Ø32、Ø40	42	30	18.4	10	16	M14×1.5	22	22	36	36.2	2	8	10	1.1	42.4
CQ-Y050	Ø50、Ø63	56	40	22.4	14	20	M18×1.5	28	28	44	44.2	2	12	14	1.1	50.4
CQ-Y080	Ø80	71	50	28.4	18	23	M22×1.5	38	38	56	56.2	2	15	18	1.7	63.6
CQ-Y100	Ø100	79	55	32.4	22	24	M26×1.5	44	44	64	64.2	2.5	19	22	1.7	72.6

■ Product Feature

Small axial size, compact structure, nice appearance, direct-assembly.

symbol

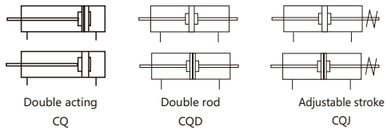

■ Specification

StrokeΦ(mm)	32	40	50	63	80	100
Action	Double acting					
Fluid	Compressed air					
Pressure range	0.05~1.0MPa					
Proof pressure	1.5MPa					
Temp.range	-10~60℃(no freezing)					
Speed range	50~500mm/s					
Body material	Aluminum alloy					
Installation	Through hole with female thread					
Port size	Rc1/8		Rc1/4		Rc3/8	
Port of S/K	CQ32-R1	CB40-R1	CB50-R1	CB63-R1	CB80-R1	CB100-R1

Please use ISOVG32 oil if needed

■ Stroke/Auto switch type

Bore(mm)	Standard stroke	Switch model
32	125 150 175 200 250 300	KTX-06R KTX-06P
40		
50		
63		
80		
100		

*25mm intervals between 125~200mm stroke
Non-standard stroke is available, contact us if any special requirement.

■ Ordering code

CQ D 32 - 125 - 15 - S - B - M

Series

Null	Single rod
D	Double rod
J	Adjustable stroke

Bore

Stroke

Adjustable stroke

10	10mm
20	20mm
30	30mm
40	40mm
50	50mm
75	75mm
100	100mm

Note: Double rod no this option

Magnet

Null	without magnet
S	magnet

Installation

B	Standard
F	Rod side flange
G	Head side flange
D	Rear clevis
L	Foot

Thread

Null	female
M	male

■ Dimensions (mm)

Compact cylinder : CQ Series

Ø32~Ø100(stroke > 100)

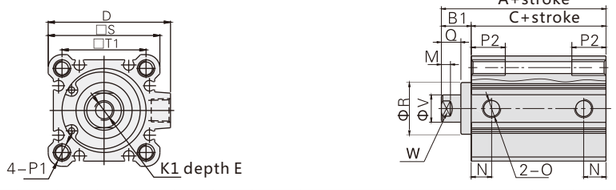

Bore	A	B1	C	D	E	K1	M	N	O	P1	P2	Q	R	S	T1	V	W
32	62.5	17	45.5	49.5	13	M8×1.25	6	12.5	Rc1/8	Counterbore: M6×1.0 Through-hole : Ø5.2	10	12	22	45	34	16	14
40	72	17	55	57	13	M8×1.25	6	14	Rc1/8	Counterbore:M6×1.0 Through-hole: Ø5.2	10	12	28	53	40	16	14
50	73.5	18	55.5	71	15	M10×1.5	6.5	14	Rc1/4	Counterbore: M8×1.25 Through-hole: Ø6.8	14	13	35	64	50	20	17
63	75	18	57	84	15	M10×1.5	6.5	16.5	Rc1/4	Counterbore: M10×1.5 Through-hole:Ø8.5	18	13	35	77	60	20	17
80	86	20	66	104	21	M16×2.0	8.5	19	Rc3/8	Counterbore: M12×1.75 Through-hole: Ø10.3	22	15	43	98	77	25	22
100	97.5	22	75.5	123.5	27	M20×2.5	9.5	23	Rc3/8	Counterbore: M12×1.75 Through-hole: Ø10.3	22	17	59	117	94	32	27

CQ Series Compact Cylinder(Long stroke)
harhesh

■ Dimensions (mm)

Compact cylinder : CQD Series

Ø32~Ø100(stroke > 100)

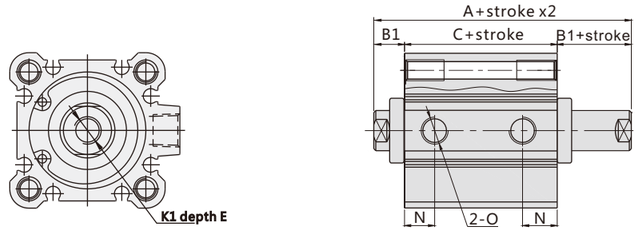

Compact cylinder : CQJ Series

Ø32~Ø100(stroke > 100)

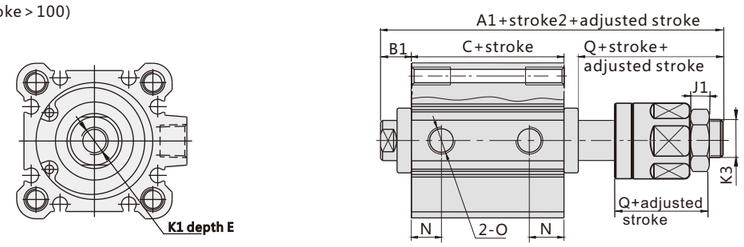

Bore	A		A1		C		B1	E	N	Q	J1	K3
	Standard	Magnet	Standard	Magnet	Standard	Magnet						
32	79.5	89.5	95.5	105.5	45.5	55.5	17	13	12.5	28	7	M12×1.25
40	89	99	105	115	55	65	17	13	14	28	7	M12×1.25
50	91.5	101.5	107.5	117.5	55.5	65.5	18	15	14	29	8	M16×1.5
63	93	103	109	119	57	67	18	15	16.5	29	8	M16×1.5
80	106	116	126.5	136.5	66	76	20	21	19	35.5	10	M20×1.5
100	119.5	129.5	145	155	75.5	85.5	22	27	23	42.5	13.5	M27×2.0

Note: the unlabeled size is same to standard

Male Thread

Ø32~Ø100(Stroke > 100)

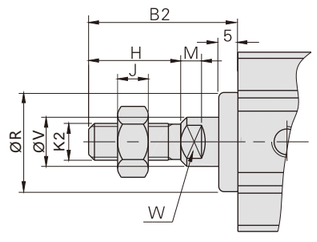

Stroke	B2	H	J	K2	M	R	V	W
32	38.5	23.5	8	M14×1.5	6	22	16	14
40	38.5	23.5	8	M14×1.5	6	28	16	14
50	43.5	28.5	11	M18×1.5	6.5	35	20	17
63	43.5	28.5	11	M18×1.5	6.5	35	20	17
80	53.5	35.5	13	M22×1.5	8.5	43	25	22
100	53.5	35.5	13	M26×1.5	10	59	32	27

Note: the accessories and installation size are same to CQ standard series.

■ Product Feature

Small axial size, compact structure, nice appearance, direct-assembly.

Symbol

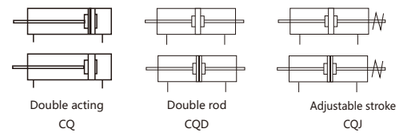

■ Specification

Bore Φ(mm)	125	140	160
Action	Double acting		
Fluid	Compressed air		
Pressure range	0.05~1.0MPa		
Proof pressure	1.5MPa		
Temp. range	-10~60℃(no freezing)		
Speed range	50~500mm/s		
Material of body	Aluminum alloy		
Installation	Through hole with female thread		
Port size	Rc3/8		

■ Stroke/Auto switch type

Stroke(mm)	Standard stroke	Switch model
125	10 20 30 40 50 75 100 125 150 175 200 250 300	
140		
160		

Note: The non-standard cylinder is modified using upper level cylinder, and the size too.

■ Ordering code

CQ D 125 - 125 - 15 - S - B - M

Series

Null	Single rod
D	Doule rod
J	Adjustable stroke

Bore

Stroke

Adjustable stroke

10	10mm	50	50mm
20	20mm	75	75mm
30	30mm	100	100mm
40	40mm		

Note: double rod no this option

Magnet

Null	Without magnet
S	Magnet

Thread

Null	Female
M	Male

Installation

B	Standard

■ Dimensions (mm)

Compact cylinder: CQseries
Φ125-Φ160

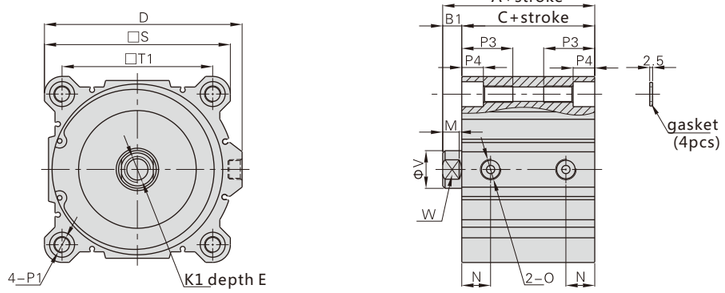

Bore	A	B1	C	D	E St≤10	E St>10	K1	M	N	O	S	P1	P3	P4	T1	V	W
125	99	16	83	153	22.5	30	M22X2.5	12	24.5	Rc3/8	142	Counterbore: Ø21.2 Thread: M14X2.0 Through-hole: Ø12.3	43.4	18.4	114	32	27
140	99	16	83	168	22.5	30	M22X2.5	12	24.5	Rc3/8	158	Counterbore: Ø21.2 Thread: M14X2.0 Through-hole Ø12.3	43.4	18.4	128	32	27
160	108	17	91	188	26.5	30	M24X3.0	14	27.5	Rc3/8	178	Counterbore: Ø24.2 Thread: M16X2.0 Through-holeØ14.3	49.2	21.2	144	40	36

Note: The gasket is needed in through-hole.

CQ Series Compact Cylinder(Large bore)
harhesh

■ Dimensions (mm)

Compact cylinder: CQD series
Φ125-Φ160

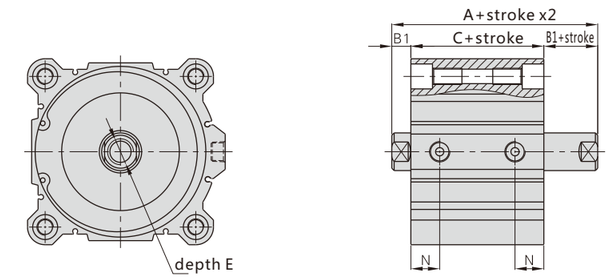

Bore	A	B1	C	E St≤10	E St>10	N
125	115	16	83	22.5	30	24.5
140	115	16	83	22.5	30	24.5
160	125	17	91	26.5	30	27.5

Note: the unlabeled size is same to standard.

Compact cylinder: CQJ series
Φ125-Φ160

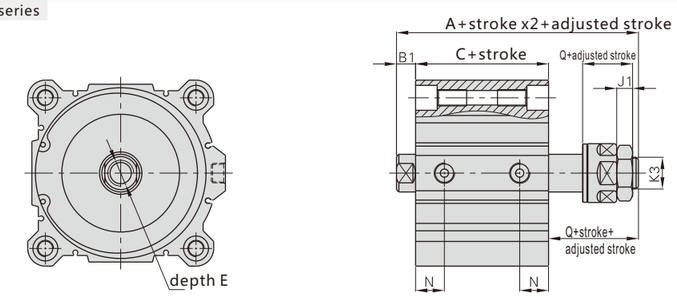

Bore	A	B1	C	E St≤10	E St>10	N	Q	J1	K3
125	140.8	16	83	22.5	30	24.5	42.5	13.5	M27X2.0
140	140.8	16	83	22.5	30	24.5	42.5	13.5	M27X2.0
160	175.3	17	91	26.5	30	27.5	68	18	M36X2.0

Note: the unlabeled size is same to standard.

Male thread

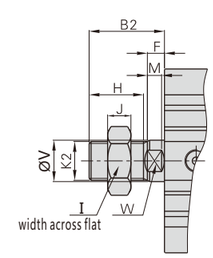

Bore	B2	F	H	I	J	K2	M	V	W
125	58	13	42	46	18	M30X1.5	9	32	27
140	58	13	42	46	18	M30X1.5	9	32	27
160	64	14	47	55	21	M36X1.5	11	40	36

■ Product Feature

Compact structure, nice appearance, direct-assembly.

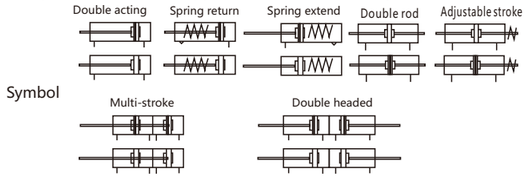

■ Specification

Bore (mm)		12	16	20	25	32	40	50	63	80	100
Action		Double acting									
		Single acting spring return, Single acting spring extend								—	
Fluid		Compressed air									
Pressure range(MPa)	Double acting	0.1～0.9									
	Single acting	0.2～0.9								—	
Proof pressure(MPa)		1.35									
Temp. range(℃)		- 10～60									
Speed range (mm/s)	Double acting	30～500mm/s						30～350mm/s		30～250mm/s	
	Single acting	100-500mm/s						—			
Material of body		Aluminum alloy									
Cushion		Rubber bumper									
Port size		M5×0.8				Rc1/8		Rc1/4		Rc3/8	
Code of S/K		CB12-R1	CB16-R1	CB20-R1	CB25-R1	CB32-R1	CB40-R1	CB50-R1	CB63-R1	CB80-R1	CB100-R1

Please use ISOVG32 oil if needed.

■ Stroke/Auto switch type

Bore (mm)		12 16	20	25		32 40 50 63 80 100		Switch model	Switch model
Double acting	Without magnet	5～60mm	5～85mm	5～90mm	100～110mm	5～90mm	100～130mm		
		5mm/level	5mm/level	5mm/level	10mm/level	5mm/level	10mm/level		
	Magnet	5～50mm	5～75mm	5～90mm	100mm	5～90mm	100～120mm		
		5mm/level	5mm/level	5mm/level		5mm/level	10mm/level		
Single acting	Without magnet	5～30mm	5～30mm	5～30mm		5～30mm	—		
		5mm/level	5mm/level	5mm/level		5mm/level	—		
	Magnet	5～30mm	5～30mm	5～30mm		5～30mm	—		
		5mm/level	5mm/level	5mm/level		5mm/level	—		
Longest stroke		60mm	100mm	120mm		130mm			

■ Ordering Code

CB D 16 - 30 - 10 - S - B - M

Series

Acting

Null	Double acting single rod
D	Double rod
J	Adjustable stroke
S	Spring return
T	Spring extend
M	Multi-stroke
B	Double headed

Bore

Stroke

First stroke for Multi-mounting & Double headed

Adj. stroke

10	10mm
20	20mm
30	30mm
40	40mm
50	50mm
75	75mm
100	100mm

1、Adj. stroke is second stroke for Multi-mouting & Double headed.
2、CB、CBS、CBT、CBD no this option

Magnet

Null	Without magnet
S	Magnet

Thread

Null	Female
M	Male

Installation

B	Standard

CB Series Compact Cylinder
harhesh

■ Dimensions (mm)

Compact cylinder: CB series
Standard (double acting)

Φ12 Φ16

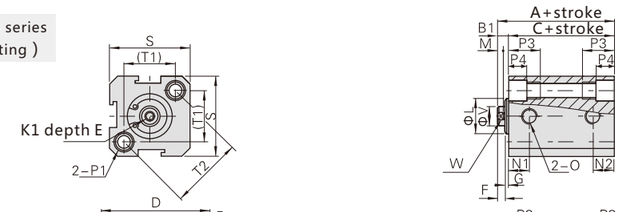

Φ20~Φ100

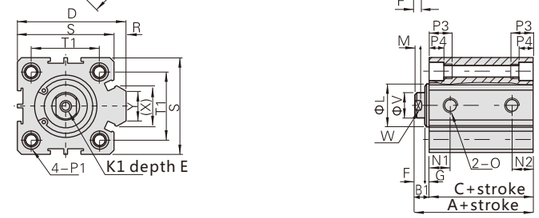

Note1) : Φ32 Size illustration
Standard Stroke≤30 A=31.5 C=24.5
Standard Stroke≥35 A=41.5 C=34.5

Symbol / Bore	Standard A	Standard C	Magnet A	Magnet C	B1	D	E	F	G	K1	L	M	N1 S=5	N1 S>5	N2 S=5	N2 S>5
12	22	17	32	27	5	–	6	4	1	M3×0.5	10	3	7.5	7.5	5	5
16	24	18.5	34	28.5	5.5	–	6	4	1.5	M3×0.5	11	3	7.5	7.5	5	5.5
20	25	19.5	35	29.5	5.5	36	8	4	1.5	M4×0.7	13	3	8.5	8.5	5.5	5.5
25	27	21	37	31	6	42	10	4	2	M5×0.8	17	3	8.5	8.5	5.5	5.5
32	Note1)	Note1)	41.5	34.5	7	50	12	4.6	2.4	M6×1.0	22	3	7.5	9.5	6.5	8
40	33	26	43	36	7	58.5	12	4	3	M8×1.25	28	3	10	10	7	7
50	37	28	47	38	9	71.5	15	5	4	M10×1.5	38	3	8	11.5	8	10.5
63	41	32	51	42	9	84.5	15	5	4	M10×1.5	40	3	9.5	11	9.5	11
80	52	41	62	51	11	104	20	6	5	M14×1.5	45	4	14	14	1.4	14
100	63	51	63	51	12	124	20	7	5	M18×1.5	55	4	17	20	15	15

Bore	O	P1	P3	P4	R	S	T1	T2	V	W	X	Y
12	M5X0.8	Counterbore : Φ7 Thread : M5×0.8 Through-hole : Φ4.2	12	4.5	—	25	16.2	23	6	5	—	—
16	M5X0.8	Counterbore : Φ7 Thread : M5×0.8 Through-hole : Φ4.2	12	4.5	—	29	19.8	28	6	5	—	—
20	M5X0.8	Counterbore : Φ7 Thread : M5×0.8 Through-hole : Φ4.2	14	4.5	2	34	24	—	8	6	11.3	10
25	M5X0.8	Counterbore : Φ8.7 Thread : M6×10 Through-hole : Φ5.3	15	5.5	2	40	28	—	10	8	12	10
32	Rc1/8	Counterbore : Φ8.7 Thread : M6×10 Through-hole : Φ5.3	16	5.5	6	44	34	—	12	10	18.3	15
40	Rc1/8	Counterbore : Φ10.3 Thread : M8×1.25 Through-hole : Φ6.7	20	7.5	6.5	52	40	—	16	14	21.7	16
50	Rc1/4	Counterbore : Φ11 Thread : M8×1.25 Through-hole : Φ6.7	25	8.5	9.5	62	48	—	20	17	30	20
63	Rc1/4	Counterbore : Φ11 Thread : M8×1.25 Through-hole : Φ6.7	25	8.5	9.5	75	60	—	20	17	28.7	20
80	Rc3/8	Counterbore : Φ16 Thread : M12×1.75 Through-hole : Φ10.3	25	10.5	10	94	74	—	25	22	36	26
100	Rc3/8	Counterbore : Φ17.5 Thread : M14×2.0 Through-hole : Φ12.2	30	13	10	114	90	—	32	27	35	26

Male thread

Φ12 Φ16

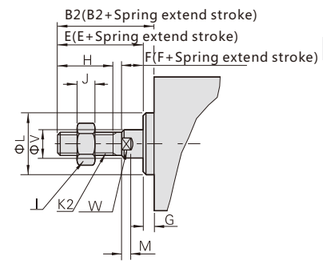

Φ20~Φ100

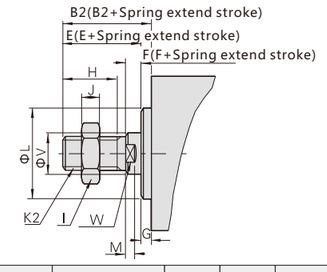

Symbol / Bore	B2	E	F	G CBD/CBJ	H	I	J	K2	L	M	V	W
12	17	16	4	1	10	8	4	M5×0.8	10	3	6	5
16	17.5	16	4	1.5	10	8	4	M5×0.8	11	3	6	5
20	20.5	19	4	1.5	13	10	5	M6×1.0	13	3	8	6
25	23	21	4	2	15	12	5	M8×1.25	17	3	10	8
32	25	22	4	3	15	17	6	M10×1.25	22	3	12	10
40	35	32	4	3	25	19	8	M14×1.5	28	3	16	14
50	37	33	5	4	25	27	11	M18×1.5	38	3	20	17
63	37	33	5	4	25	27	11	M18×1.5	40	3	20	17
80	44	39	6	5	30	32	13	M22×1.5	45	4	25	22
100	50	45	7	5	35	36	13	M26×1.5	55	4	32	27

■ Dimensions (mm)

CBS (Spring return)

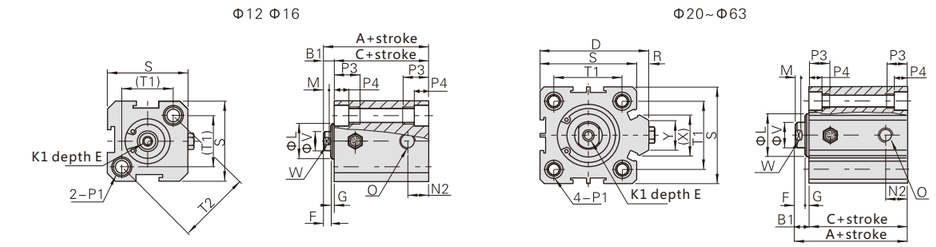

CBT (Spring extend)

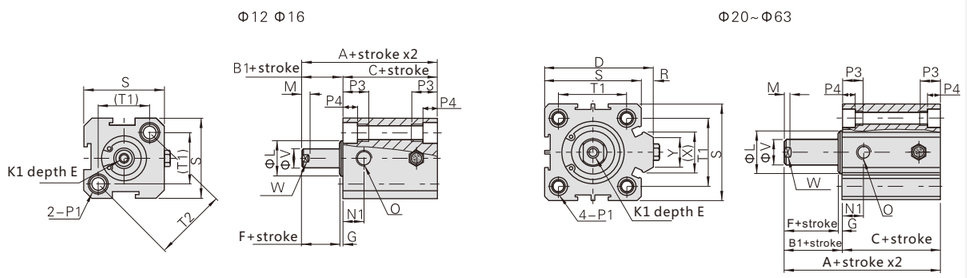

Symbol / Bore	A (Standard)		A (Magnet)		C (Standard)		C (Magnet)		B1	D	E	F	G	K1	L	M	N1
	St≤10	St>10	St≤10	St>10	St≤10	St>10	St≤10	St>10									
12	32	42	42	52	27	37	37	47	5	—	6	4	1	M3×0.5	10	3	7.5
16	34	44	44	54	28.5	38.5	38.5	48.5	5.5	—	6	4	1.5	M3×0.5	11	3	7.5
20	35	45	45	55	29.5	39.5	39.5	49.5	5.5	36	8	4	1.5	M4×0.7	13	3	8.5
25	37	47	47	57	31	41	41	51	6	42	10	4	2	M5×0.8	17	3	8.5
32	51.5	61.5	51.5	61.5	44.5	54.5	44.5	54.5	7	50	12	4	2.4	M6×1.0	22	3	9.5
40	43	53	53	53	36	46	46	56	7	58.5	12	4	3	M8×1.25	28	3	10
50	47	57	57	67	38	48	48	58	9	71.5	15	5	4	M10×1.5	38	3	11.5
63	51	61	61	71	42	52	52	62	9	84.5	15	5	4	M10×1.5	40	3	11

Symbol / Bore	N2	O	R	S	T1	T2	P1	P3	P4	V	W	X	Y
12	5	M5×0.8	—	25	16.2	23	Counterbore : Φ7 Thread : M5×0.8 Through-hole :Φ4.2	12	4.5	6	5	—	—
16	5.5	M5×0.8	—	29	19.8	28	Counterbore : Φ7 Thread : M5×0.8 Through-hole :Φ4.2	12	4.5	6	5	—	—
20	5.5	M5×0.8	2	34	24	—	Counterbore : Φ7 Thread : M5×0.8 Through-hole : Φ4.2	14	4.5	8	6	11.3	10
25	5.5	M5×0.8	2	40	28	—	Counterbore : Φ8.7 Thread : M6×1.0 Through-hole : Φ5.3	15	5.5	10	8	12	10
32	9	Rc1/8	6	44	34	—	Counterbore : Φ8.7 Thread : M6×1.0 Through-hole : Φ5.3	16	5.5	12	10	18.3	15
40	7	Rc1/8	6.5	52	40	—	Counterbore : Φ10.3 Thread : M8×1.25 Through-hole : Φ6.7	20	7.5	16	14	21.7	16
50	10.5	Rc1/4	9.5	62	48	—	Counterbore : Φ11 Thread : M8×1.25 Through-hole : Φ6.7	25	8.5	20	17	30	20
63	11	Rc1/4	9.5	75	60	—	Counterbore : Φ11 Thread : M8×1.25 Through-hole : Φ6.7	25	8.5	20	17	28.7	20

CB Series Compact Cylinder
harhesh

■ Dimensions (mm)

CBD (Double acting double rod)

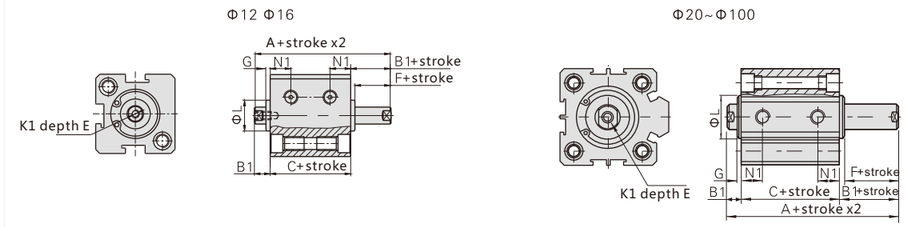

Symbol / Bore	A		C		E	N1		B1	F	G	K1	L
	Standard	Magnet	Standard	Magnet		St=5	St>5					
12	27	37	17	27	6	6.5	6.5	5	4	1	M3×0.5	10.2
16	29.5	39.5	18.5	28.5	6	7.5	7.5	5.5	4	1.5	M3×0.5	11
20	30.5	40.5	19.5	29.5	8	7.5	7.5	5.5	4	1.5	M4×0.7	15
25	33	43	21	31	10	8	8	6	4	2	M5×0.8	17
32	48.5(38.5)	48.5	34.5(24.5)	34.5	12	9	9	7	4	3	M6×1.0	22
40	50(40)	50	36(26)	36	12	10	10	7	4	3	M8×1.25	28
50	56(46)	56	38(28)	38	15	10.5	10.5	9	5	4	M10×1.5	38
63	60(50)	60	42(32)	42	15	11	11	9	5	4	M10×1.5	40
80	73(63)	73	51(41)	51	20	14	14	11	6	5	M14×1.5	45
100	75	85	51	61	20	20	20	12	7	5	M18×1.5	55

Note: Size illustration
the number in bracket() applicable for stroke≤30

CBJ (Adjustable stroke)

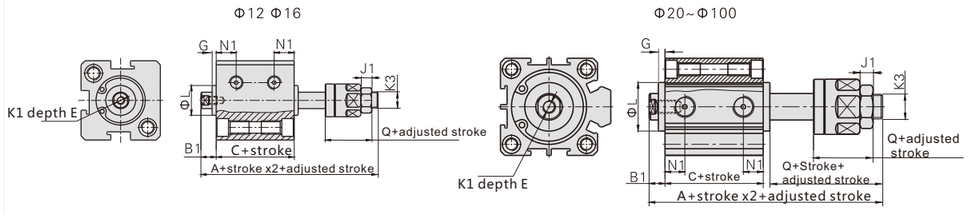

Symbol / Bore	A		C		E	N1		B1	Q	G	J1	K1	K3	L
	Standard	Magnet	Standard	Magnet		St=5	St>5							
12	27	37	17	27	6	5.5	6.3	5	17	1	4	M3×0.5	M5×0.8	10.2
16	29.5	39.5	18.5	28.5	6	6.5	7.3	5.5	17	1.5	4	M3×0.5	M5×0.8	11
20	30.5	40.5	19.5	29.5	8	7.5	7.5	5.5	21	1.5	5	M4×0.7	M6×1.0	15
25	33	43	21	31	10	8	8	6	25	2	6	M5×0.8	M8×1.25	17
32	71.5(61.5)	71.5	34.5(24.5)	34.5	12	8	9	7	27	3	6	M6×1.0	M10×1.25	22
40	74(64)	74	36(26)	36	12	8	10	7	28	3	7	M8×1.25	M12×1.25	28
50	80(70)	80	38(28)	38	15	8	10.5	9	29	4	8	M10×1.5	M16×1.5	38
63	84(74)	84	42(32)	42	15	9.5	11.8	9	29	4	8	M10×1.5	M16×1.5	40
80	102.5(92.5)	102.5	51(41)	51	20	11.5	14.5	11	35.5	5	10	M14×1.5	M20×1.5	45
100	110.5	110.5	51	61	20	16	20.5	12	42.5	5	13.5	M18×1.5	M27×2.0	55

Note: Size illustration
the number in bracket() applicable for stroke≤30

■ Dimensions (mm)

CBM (Multi-stroke)

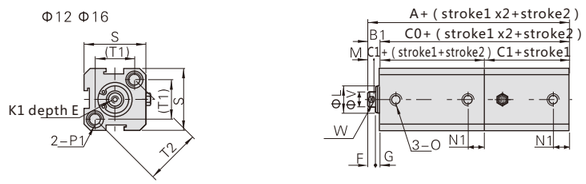

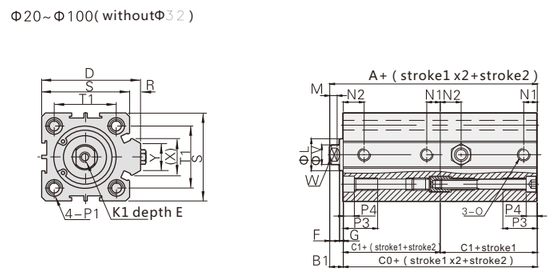

symbol / Bore	A		C0		C1		N1		N2		B1
	Standard	Magnet	Standard	Magnet	Standard	Magnet	St=5	St>5	St=5	St>5	
12	39	59	34	54	17	27	5	5	7.5	7.5	5
16	42.5	62.5	37	57	18.5	28.5	5.5	5.5	8	8	5.5
20	44.5	64.5	39	59	19.5	29.5	5.5	5.5	9	9	5.5
25	48	68	42	62	21	31	5.5	5.5	9.2	9.2	6
32	56	76	49	69	24.5	34.5	6.5	9	9	9	7
40	59	79	52	72	26	36	7.5	7.5	9.5	9.5	7
50	65	85	56	76	28	38	8	10.5	8	10.5	9
63	73	93	64	84	32	42	9.5	11	9.5	12	9
80	93	113	82	102	41	51	11.5	14.5	11.5	14.5	11
100	114	134	102	122	51	61	16	20.5	16	20.5	12

Bore	D	E	F	G	K1	L	M	O	R
12	—	6	4	1	M3×0.5	10.2	3	M5X0.8	—
16	—	6	4	1.5	M3×0.5	11	3	M5X0.8	—
20	36	8	4	1.5	M4×0.7	13	3	M5X0.8	2
25	42	10	4	2	M5×0.8	17	3	M5X0.8	2
32	50	12	4	2.4	M6×1.0	22	3	Rc1/8	6
40	58.5	12	4	3	M8×1.25	28	3	Rc1/8	6.5
50	71.5	15	5	4	M10×1.5	38	3	Rc1/4	9.5
63	84.5	15	5	4	M10×1.5	40	3	Rc1/4	9.5
80	104	20	6	5	M14×1.5	45	4	Rc3/8	10
100	124	20	7	5	M18×1.5	55	4	Rc3/8	10

Bore	P1	P3	P4	S	T1	T2	V	W	X	Y
12	Counterbore:Φ7 Thread : M5×0.8 Through-hole: Φ4.2	12	4.5	25	16.2	23	6	5	—	—
16	Counterbore:Φ7 Thread: M5×0.8 Through-hole: Φ4.2	12	4.5	29	19.8	28	6	5	—	—
20	Counterbore: Φ7 Thread: M5×0.8 Through-hole: Φ4.2	14	4.5	34	24	—	8	6	11.3	10
25	Counterbore: Φ8.7 Thread: M6×1.0 Through-hole: Φ5.3	15	5.5	40	28	—	10	8	12	10
32	Counterbore: Φ8.7 Thread: M6×1.0 Through-hole: Φ5.3	16	5.5	44	34	—	12	10	18.3	15
40	Counterbore: Φ10.3 Thread: M8×1.25 Through-hole: Φ6.7	20	7.5	52	40	—	16	14	21.7	16
50	Counterbore: Φ11 Thread: M8×1.25 Through-hole: Φ6.7	25	8.5	62	48	—	20	17	30	20
63	Counterbore : Φ11 Thread: M8×1.25 Through-hole : Φ6.7	25	8.5	75	60	—	20	17	28.7	20
80	Counterbore: Φ16.5 Thread: M12×1.75 Through-holeΦ10.3	25	10.5	94	74	—	25	22	36	26
100	Counterbore : Φ17.5 Thread : M14×2.0 Through-hole : Φ12.2	30	13.5	114	90	—	32	27	35	26

CB Series Compact Cylinder
harhesh

■ Dimensions (mm)

CBB (Double headed)

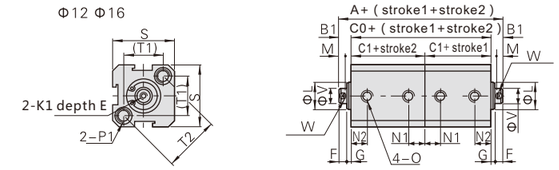

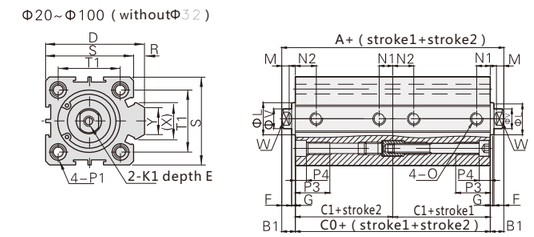

Symbol / Bore	A		C0		C1		N1		N2		B1
	Standard	Magnet	Standard	Magnet	Standard	Magnet	St=5	St>5	St=5	St>5	
12	44	64	34	54	17	27	5	5	7.5	7.5	5
16	48	68	37	57	18.5	28.5	5.5	5.5	8	8	5.5
20	50	70	39	59	19.5	29.5	5.5	5.5	9	9	5.5
25	54	74	42	62	21	31	5.5	5.5	9.2	9.2	6
32	63	83	49	69	24.5	34.5	6.5	9	9	9	7
40	66	86	52	72	26	36	7.5	7.5	9.5	9.5	7
50	74	94	56	76	28	38	8	10.5	8	10.5	9
63	82	102	64	84	32	42	9.5	11	9.5	12	9
80	104	124	82	102	41	51	11.5	14.5	11.5	14.5	11
100	126	146	102	122	51	61	16	20.5	16	20.5	12

Bore	D	E	F	G	K1	L	M	O	R
12	—	6	4	1	M3×0.5	10	3	M5X0.8	—
16	—	6	4	1.5	M3×0.5	11	3	M5X0.8	—
20	36	8	4	1.5	M4×0.7	13	3	M5X0.8	2
25	42	10	4	2	M5×0.8	17	3	M5X0.8	2
32	50	12	4	2.4	M6×1.0	22	3	Rc1/8	6
40	58.5	12	4	3	M8×1.25	28	3	Rc1/8	6.5
50	71.5	15	5	4	M10×1.5	38	3	Rc1/4	9.5
63	84.5	15	5	4	M10×1.5	40	3	Rc1/4	9.5
80	104	20	6	5	M14×1.5	45	4	Rc3/8	10
100	124	20	7	5	M18×1.5	55	4	Rc3/8	10

Bore	P1	P3	P4	S	T1	T2	V	W	X	Y
12	Counterbore:Φ7 Thread: M5×0.8 Through-holeΦ4.2	12	4.5	25	16.2	23	6	5	—	—
16	Counterbore:Φ7 Thread: M5×0.8 Through-holeΦ4.2	12	4.5	29	19.8	28	6	5	—	—
20	Counterbore : Φ7 Thread: M5×0.8 Through-hole Φ4.2	14	4.5	34	24	—	8	6	11.3	10
25	Counterbore : Φ8.7 Thread: M6×1.0 Through-holeΦ5.3	15	5.5	40	28	—	10	8	12	10
32	Counterbore : Φ8.7 Thread: M6×1.0 Through-hole : Φ5.3	16	5.5	44	34	—	12	10	18.3	15
40	Counterbore : Φ10.3 Thread: M8×1.25 Through-holeΦ6.7	20	7.5	52	40	—	16	14	21.7	16
50	Counterbore : Φ11 Thread : M8×1.25 Through-hole : Φ6.7	25	8.5	62	48	—	20	17	30	20
63	Counterbore : Φ11 Thread : M8×1.25 Through-hole : Φ6.7	25	8.5	75	60	—	20	17	28.7	20
80	Counterbore : Φ16.5 Thread : M12×1.75 Through-hole : Φ10.3	25	10.5	94	74	—	25	22	36	26
100	Counterbore : Φ17.5 Thread : M14×2.0 Trough-hole : Φ12.2	30	13.5	114	90	—	32	27	35	26

■ Product feature

Implement ISO 21287 standard

Body and end cap connect by thread joint. Easy to maintain, good strength, compact structure. Inner body rolling process and anodic oxidation ensure good abrasive resistance.

Symbol

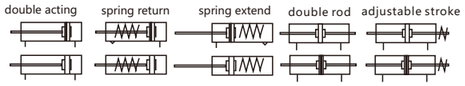

■ Specification

Bore size (mm)	32	40	50	63	80	100
Action	double acting, single acting(spring return or extend)					
Fluid	Compressed air					
Pressure range	double acting : 0.1~1.0MPa , single acting : 0.2~1.0MPa					
Proof pressure	1.5MPa					
Temp .range	- 10~60℃					
Speed range	30~500mm/s					
Lubricant	Non-lube					
Cushion	Rubber bumper					
Port size	G1/8					G1/4

Please use ISOVG32 oil if needed.

■ Stroke/Auto switch type

Acting	Bore	Stroke (mm)	Max. (mm)	Switch model
Double	32	5 10 15 20 25 30 35 40 45 50 55 60 70 75 80 90 100 110 120 125 150 160 175 200	200	KTX-32R KTX-32P
	40	5 10 15 20 25 30 35 40 45 50 55 60 70 75 80 90 100 110 120 125 150 160 175 200	200	
	50	5 10 15 20 25 30 35 40 45 50 55 60 70 75 80 90 100 110 120 125 150 160 175 200 225 250	250	
	63	5 10 15 20 25 30 35 40 45 50 55 60 70 75 80 90 100 110 120 125 150 160 175 200 225 250	250	
	80	5 10 15 20 25 30 35 40 45 50 55 60 70 75 80 90 100 110 120 125 150 160 175 200 225 250 275 300	300	
	100	5 10 15 20 25 30 35 40 45 50 55 60 70 75 80 90 100 110 120 125 150 160 175 200 225 250 275 300	300	
Single	32	5 10 15 20 25	25	
	40			
	50			
	63			
	80			
	100			

■ Ordering code

CL D 32 - 20 - 10 - S - B - M

Series

Acting

Null	Double acting
D	Double rod
J	Adjustable
S	Spring return
T	Spring extend

Bore

Stroke

Adjustable stroke

10	10mm
20	20mm
30	30mm
40	40mm
50	50mm
60	60mm
75	75mm
100	100mm

Magnet

Null	Without magnet
S	Magnet

Installation

B	Standard
F	Rod side flange
G	Head side flange
L	Foot
C	Rear eye
D	Rear clevis

Thread

Null	Female
M	Male

Note : CL、CLS、CLT、CLD no this option

CL Series Compact Cylinder
harhesh

■ Dimensions:(mm)

Compact Cylinder : CL series
Standard (double acting)

Ø32~Ø63

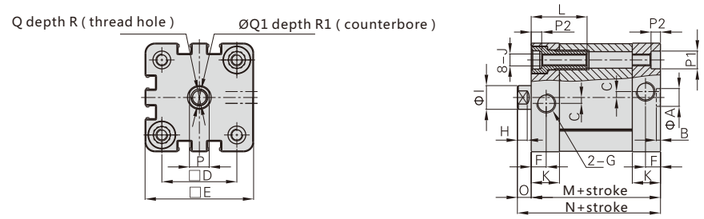

Ø80~Ø100

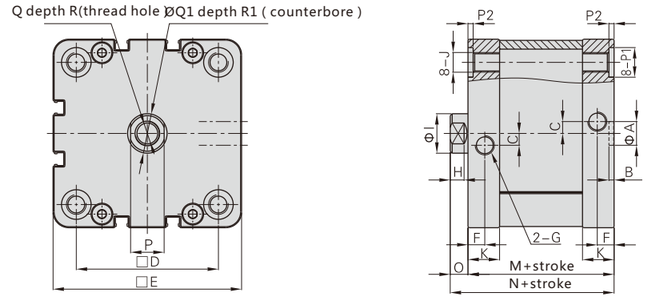

Bore	A	B	C	D	E	F	G	H	I	J	K	L	M	N
32	9	2.1	3	32.5	49.5	7.6	G1/8	5	12	M6×1.0	13.5	28.3	44.5	51
40	9	2.1	3	38	55	7.6	G1/8	5	12	M6×1.0	13.5	28.3	45.5	52.5
50	12	2.6	3	46.5	65.5	7.6	G1/8	6	16	M8×1.25	13.5	30.3	45.5	53.5
63	12	2.6	4	56.5	75.5	7.6	G1/8	6	16	M8×1.25	15	30.3	49	57
80	12	2.6	6	72	95.5	8.5	G1/8	7	20	M10×1.5	16	—	54	63
100	12	2.6	7	89	113.5	10.5	G1/8	7	20	M10×1.5	19	—	67	76

Stroke	O	P	P1	P2	Q	Q1	R	R1
32	6.5	10	9	4.8	M8×1.25	8.5	16	3.3
40	7	10	9	4.8	M8×1.25	8.5	16	3.3
50	8	13	11	4.8	M10×1.5	10.5	20	4.7
63	8	13	11	4.8	M10×1.5	10.5	20	4.7
80	9	17	15	2.6	M12×1.75	12.5	20	6.1
100	9	17	15	2.6	M12×1.75	12.5	20	6.1

Male Thread

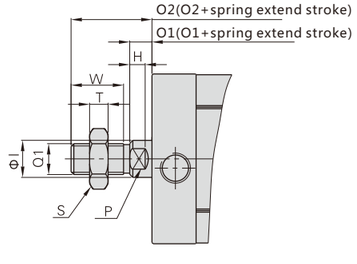

Bore	Q1	O2	W	S	T	Q1	H	I	P
32	7	26	17	17	6	M10×1.25	5	12	10
40	7	26	17	17	6	M10×1.25	5	12	10
50	8	30	20	17	7	M12×1.25	6	16	13
63	8	30	20	17	7	M12×1.25	6	16	13
80	9	37	26	23	8	M16×1.5	7	20	17
100	9	37	26	23	8	M16×1.5	7	20	17

■ Dimensions:(mm)

CLS
Spring Return

Φ32~Φ63

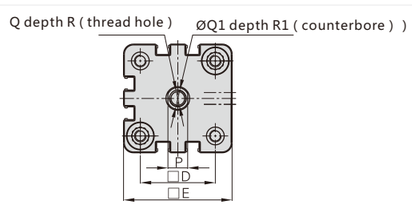

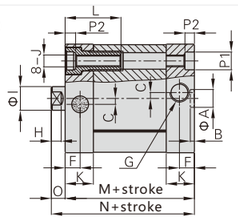

Φ80/Φ100

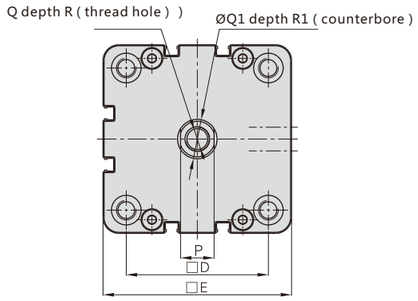

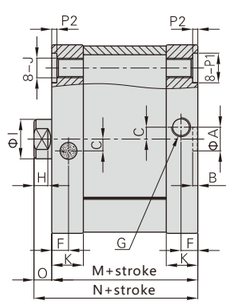

Bore	A	B	C	D	E	F	G	H	I	J	K	L	M	N	O	P	P1	P2	Q	Q1	R	R1
32	9	2.1	3	32.5	49.5	7.6	G1/8	5	12	M6×1.0	14	28.3	44	51	7	10	9	4.8	M8×1.25	8.5	16	3.3
40	9	2.1	3	38	55	7.6	G1/8	5	12	M6×1.0	14.3	28.3	45.5	52.5	7	10	9	4.8	M8×1.25	8.5	16	3.3
50	12	2.6	3	46.5	65.5	7.6	G1/8	6	16	M8×1.25	14.3	30.3	45.5	53.5	8	13	11	4.8	M10×1.5	10.5	20	4.7
63	12	2.6	4	56.5	75.5	7.6	G1/8	6	16	M8×1.25	15	30.3	49	57	8	13	11	4.8	M10×1.5	10.5	20	4.7
80	12	2.6	6	72	95.5	8.5	G1/8	7	20	M10×1.5	16	—	54	63	9	17	15	2.6	M12×1.75	12.5	20	6.1
100	12	2.6	7	89	113.5	10.5	G1/8	7	20	M10×1.5	19	—	67	76	9	17	15	2.6	M12×1.75	12.5	20	6.1

CLT
Spring extend

Φ32~Φ63

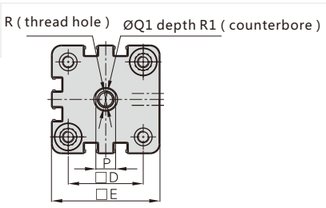

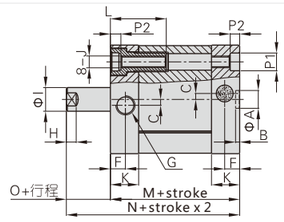

Φ80/Φ100

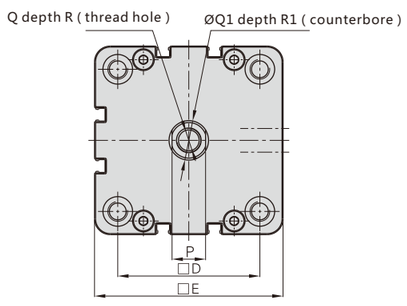

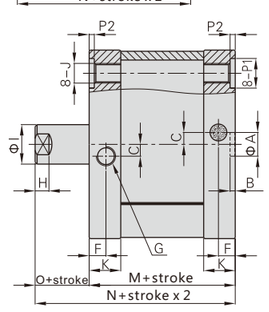

Bore	A	B	C	D	E	F	G	H	I	J	K	L	M	N	O	P	P1	P2	Q	Q1	R	R1
32	9	2.1	3	32.5	49.5	7.6	G1/8	5	12	M6×1.0	14	28.3	44	51	7	10	9	4.8	M8×1.25	8.5	16	3.3
40	9	2.1	3	38	55	7.6	G1/8	5	12	M6×1.0	14.3	28.3	45.5	52.5	7	10	9	4.8	M8×1.25	8.5	16	3.3
50	12	2.6	3	46.5	65.5	7.6	G1/8	6	16	M8×1.25	14.3	30.3	45.5	53.5	8	13	11	4.8	M10×1.25	10.5	20	4.7
63	12	2.6	4	56.5	75.5	7.6	G1/8	6	16	M8×1.25	15	30.3	49	57	8	13	11	4.8	M10×1.25	10.5	20	4.7
80	12	2.6	6	72	95.5	8.5	G1/8	7	20	M10×1.5	16	—	54	63	9	17	15	2.6	M12×1.75	12.5	20	6.1
100	12	2.6	7	89	113.5	10.5	G1/8	7	20	M10×1.5	19	—	67	76	9	17	15	2.6	M12×1.75	12.5	20	6.1

CL Series Compact Cylinder
harhesh

■ Dimensions:(mm)

CLD
Double Rod

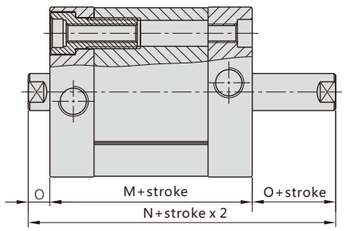

CLJ
Adjustable Stroke

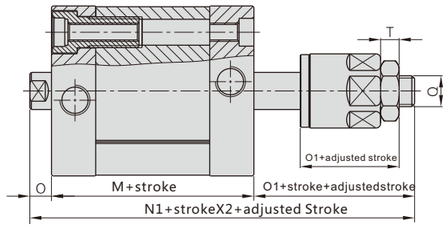

Bore	M	N	N1	O	O1	T	Q
32	44	58	78	7	27	6	M10×1.25
40	45.5	59.5	79.5	7	27	6	M10×1.25
50	45.5	61.5	81.5	8	28	7	M12×1.25
63	49	65	85	8	28	7	M12×1.25
80	54	72	92	9	29	8	M16×1.5
100	67	85	105	9	29	8	M16×1.5

Foot mount

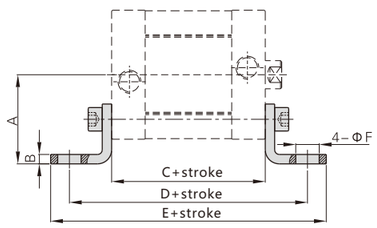

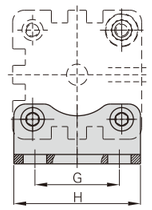

code	Bore	A	B	C	D	E	F	G	H
CG-L032	32	32	5	44	92	105	7	32	47
CG-L040	40	36	5	45.5	101.5	119.5	9	36	54
CG-L050	50	45	6	45.5	107.5	128.5	9	45	64.5
CG-L063	63	50	6	49	113	138	9	50	77
CG-L080	80	63	6	54	136	166	12.5	63	95
CG-L100	100	71	6	67	149	184	14.5	75	115

Flange mount

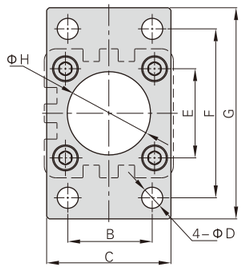

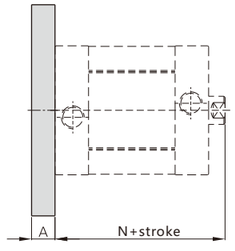

code	Bore	A	B	C	D	E	F	G	H	N
CG-F032	32	10	32	45	7	32.5	64	80	30.5	51
CG-F040	40	10	36	52	9	38	72	90	35.5	52.5
CG-F050	50	12	45	65	9	46.5	90	110	40.5	53.5
CG-F063	63	12	50	76	9	56.5	100	120	45.5	57
CG-F080	80	16	63	94	12	72	126	150	45.5	63
CG-F100	100	16	75	112	14	89	150	175	55.5	76

Dimensions:(mm)

Rear eye

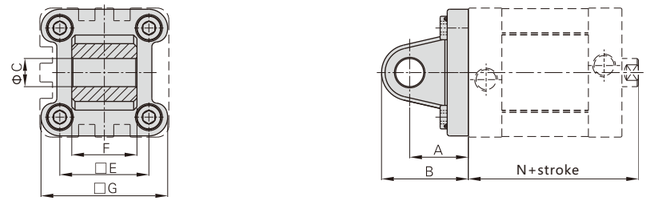

code	Bore	A	B	C	E	F	G	N
CG-C032	32	22	32	10	32.5	26	45	51
CG-C040	40	25	37	12	38	28	52	52.5
CG-C050	50	27	39	12	46.5	32	65	53.5
CG-C063	63	32	47	16	56.5	40	76	57
CG-C080	80	36	52	16	72	50	94	63
CG-C100	100	41	61	20	89	60	112	76

Rear clevis

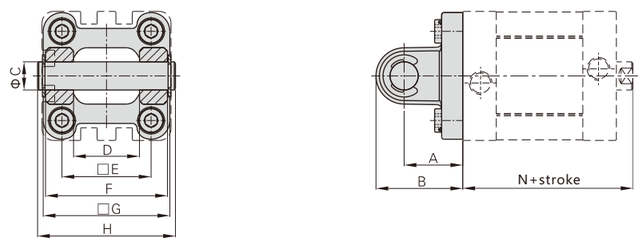

code	Bore	A	B	C	D	E	F	G	H	N
CG-D032	32	22	32	10	26	32.5	45	45	51	51
CG-D040	40	25	37	12	28	38	52	52	59	52.5
CG-D050	50	27	39	12	32	46.5	60	65	67	53.5
CG-D063	63	32	47	16	40	56.5	70	76	84	57
CG-D080	80	36	52	16	50	72	90	94	97	63
CG-D100	100	41	61	20	60	89	110	112	119	76

Rear clevis seat-joint

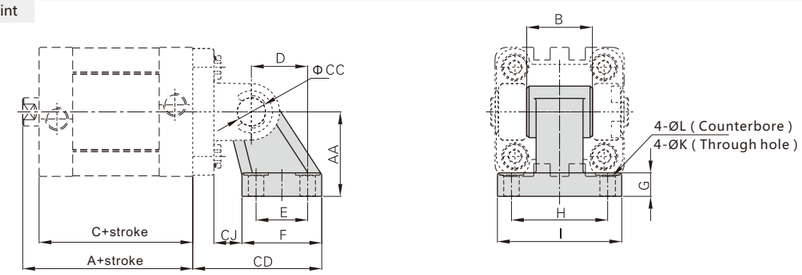

code	Bore	A	AA	B	C	CC	CD	CJ	D	E	F	G	H	I	K	L
CG-E032	32	51	32	26	44	10	49.5	10.5	21	18	31	8	38	51	6.6	11
CG-E040	40	52.5	36	28	45.5	12	55.5	12.5	24	22	35	10	41	54	6.6	11
CG-E050	50	53.5	45	32	45.5	12	67.5	12.5	33	30	45	12	50	65	9	14
CG-E063	63	57	50	40	49	16	76.5	16.5	37	35	50	12	52	67	9	14
CG-E080	80	63	63	50	54	16	93	21	47	40	60	14	66	86	11	17
CG-E100	100	76	71	60	67	20	106	20	55	50	70	15	76	96	11	17

Product Feature

Implement DIN standard

Body and end cap connect by thread joint. Easy to maintain, good strength, compact structure. Inner body rolling process and anodic oxidation ensure good abrasive resistance.

Symbol

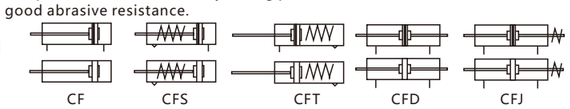

Specification

Bore size (mm)		16	20	25	32	40	50	63	80	100
Action		Double acting, single acting(spring return or extend)								
Fluid		Compressed air								
Pressure range	Double acting	0.1~1.0MPa								
	Single acting	0.2~1.0MPa								
Proof pressure (MPa)		1.5MPa								
Temp. range °C		-20~80								
Speed range (mm/s)		Double acting: 30~500; Single acting 50~500								
Stroke tolerance range		$0\sim150\ ^{+1.0}_{0}$ $>150\ ^{+1.4}_{0}$								
Cushion		Rubber bumper								
Port size		M5x0.8			G1/8					G1/4

Stroke/Auto switch type

Bore(mm)/acting		Standard stroke (mm)	Max	Allowance	Switch model
16	Double	5 10 15 20 25 30 35 40 45 50 55 60 65 70 75 80 85 90 95 100 110 120 125 150 160 175 200	200	200	
	Single	5 10	10	—	
20 25	Double	5 10 15 20 25 30 35 40 45 50 55 60 65 70 75 80 85 90 95 100 110 120 125 150 160 175 200	200	200	
	Single	5 10 15 20 25	25	—	
32 40 50 63	Double	5 10 15 20 25 30 35 40 45 50 55 60 65 70 75 80 85 90 95 100 110 120 125 150 160 175 200 225 250 275 300	300	300	
	Single	5 10 15 20 25	25	—	
80 100	Double	5 10 15 20 25 30 35 40 45 50 55 60 65 70 75 80 85 90 95 100 110 120 125 150 160 175 200 225 250 275 300 325 350 375 400	400	400	
	Single	5 10 15 20 25	25	—	

Ordering code

CF D 16 - 30 - 10 - S - B - M

Series

Action

Null	Double acting single rod
D	Double rod
J	Adjustable stroke
S	Spring return
T	Spring extend

Bore

Stroke

Adjustable stroke

10	10mm
20	20mm
30	30mm

Note: CF, CFS, CFT, CFD no this option.

Magnet

Null	Without magnet
S	Magnet

Installation

B	Standard

Thread

Null	Female
M	Male

■ Dimensions (mm)

CF series

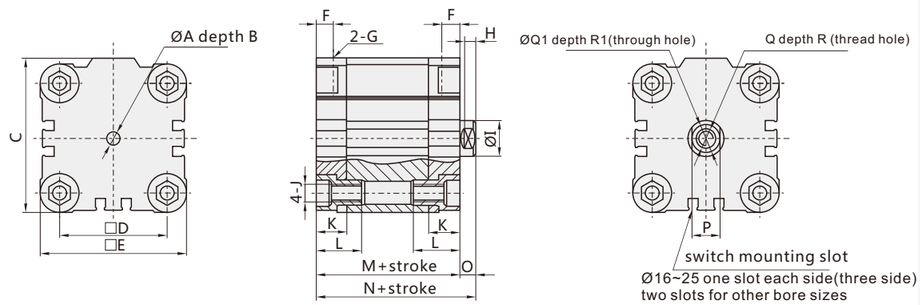

CFS series

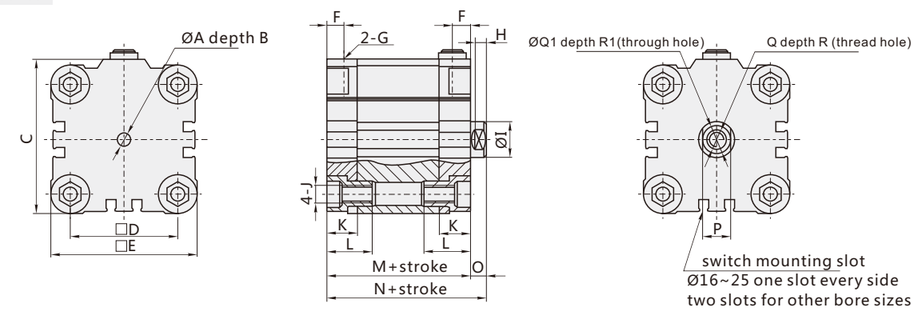

CFT series

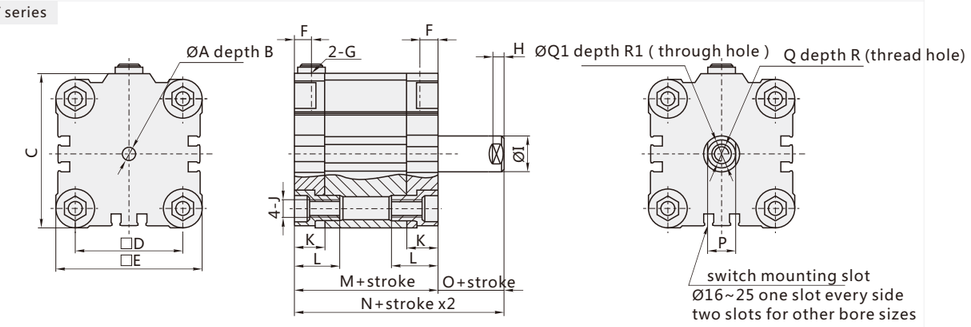

Symbol / Bore	A	B	C	D	E	F	G	H	I	J	K	L	M	N	O	P	Q	Q1	R	R1
16	6	4	30	18	29	7	M5x0.8	3	8	M4x0.7	11.5	18	38	42.5	4.5	6	M4x0.7	4.5	10	1.5
20	6	4	37.5	22	36	7	M5x0.8	3	10	M5x0.8	11.5	18	38	42.5	4.5	8	M5x0.8	5.5	12	2
25	6.1	4	41.5	26	40	7	M5x0.8	4	10	M5x0.8	11.5	18	39.5	45	5.5	8	M5x0.8	5.5	12	2
32	6.1	4	52	32	50	8	G1/8	4.5	12	M6x1.0	14	21	44.5	50.5	6	10	M6x1.0	6.5	14	2.6
40	6.1	4	62.5	42	60	8	G1/8	4.5	12	M6x1.0	14	21	45.5	52	6.5	10	M6x1.0	6.5	14	2.6
50	6.1	4	71	50	68	8	G1/8	5	16	M8x1.25	14	21.5	45.5	53	7.5	13	M8x1.25	8.5	16	3.3
63	8.1	4	91	62	87	8	G1/8	5	16	M10x1.5	15	24	50	57.5	7.5	13	M8x1.25	8.5	16	3.3
80	8.1	4	111	82	107	8.5	G1/8	5.5	20	M10x1.5	16	27	56	64	8	17	M10x1.5	10.5	20	4.7
100	8.1	4	133	103	128	10.5	G1/4	7.5	25	M10x1.5	19	32	66.5	76.5	10	22	M12x1.75	12.5	24	6.1

harhesh CF Series Compact Cylinder

■ Dimensions (mm)

CF-M series

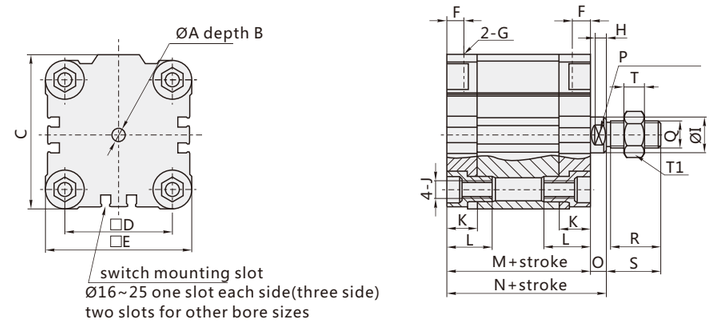

CFS-M series

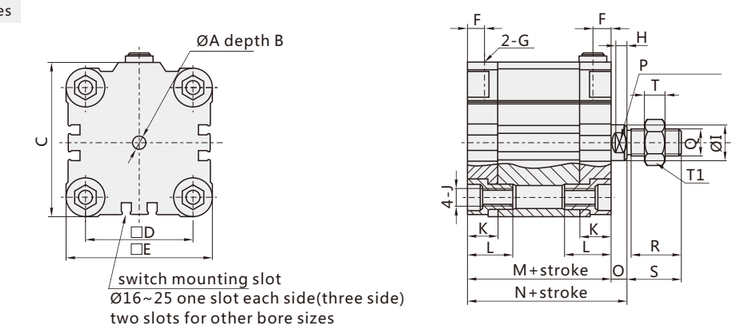

CFT-M series

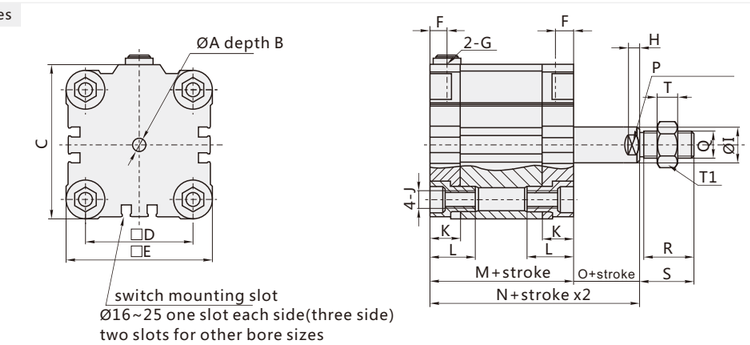

Symbol / Bore	A	B	C	D	E	F	G	H	I	J	K	L	M	N	O	P	Q	R	S	T	T1
16	6	4	30	18	29	7	M5x0.8	3	8	M4x0.7	11.5	18	38	42.5	4.5	6	M8x1.25	19	20	6	12
20	6	4	37.5	22	36	7	M5x0.8	3	10	M5x0.8	11.5	18	38	42.5	4.5	8	M10x1.25	20	22	6	17
25	6.1	4	41.5	26	40	7	M5x0.8	4	10	M5x0.8	11.5	18	39.5	45	5.5	8	M10x1.25	20	22	6	17
32	6.1	4	52	32	50	8	G1/8	4.5	12	M6x1.0	14	21	44.5	50.5	6	10	M10x1.25	20	22	6	17
40	6.1	4	62.5	42	60	8	G1/8	4.5	12	M6x1.0	14	21	45.5	52	6.5	10	M10x1.25	20	22	6	17
50	6.1	4	71	50	68	8	G1/8	5	16	M8x1.25	14	21.5	45.5	53	7.5	13	M12x1.25	22	24	7	17
63	8.1	4	91	62	87	8	G1/8	5	16	M10x1.5	15	24	50	57.5	7.5	13	M12x1.25	22	24	7	17
80	8.1	4	111	82	107	8.5	G1/8	5.5	20	M10x1.5	16	27	56	64	8	17	M16x1.5	30	32	8	23
100	8.1	4	133	103	128	10.5	G1/4	7.5	25	M10x1.5	19	32	66.5	76.5	10	22	M20x1.5	38	40	10	26

Dimensions (mm)

CFD series

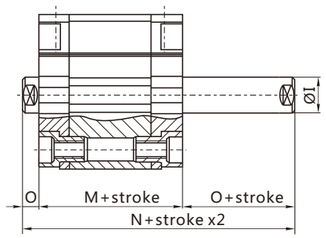

CFJ series

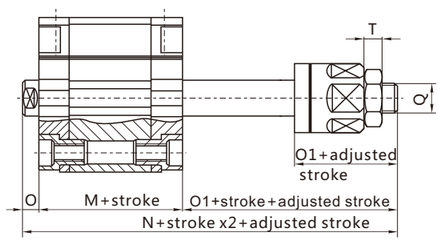

Symbol / Bore	M	N	N1	O	O1	T	Q
16	38	47	67.5	4.5	25	6	M8x1.25
20	38	47	69.5	4.5	27	6	M10x1.25
25	39.5	50.5	72	5.5	27	6	M10x1.25
32	44.5	56.5	77.5	6	27	6	M10x1.25
40	45.5	58.5	79	6.5	27	6	M10x1.25
50	45.5	60.5	81	7.5	28	7	M12x1.25
63	50	65	85.5	7.5	28	7	M12x1.25
80	56	72	93	8	29	8	M16x1.5
100	66.5	86.5	112	10	35.5	10	M20x1.5

Product Feature

Serval mounting types, easy to install, cylinders can combined to use, save space.

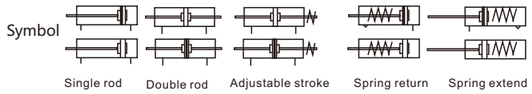

Specification

Bore size (mm)			6	10	16	20	25	32
Fluid			Compressed air					
Action			Double acting Single acting: Spring return/Spring extend					
Max pressure (MPa)			0.7					
Min pressure (MPa)	Double acting	Single rod	0.12	0.06		0.05		
		Non rotate	0.18	0.13		0.11		
	Single acting	Standard	0.20	0.15		0.13		
		Non-rotate	0.23	0.18		0.16		
Ambient and fluid temperature			-10~+60℃ (No freezing)					
Piston speed			50~500mm/s					
Cushion			Rubber bumper on both end					
Lubricant			Non-lube					
Port size			M5×0.8					Rc1/8
Code of S/K			CU6-R1	CU10-R1	CU16-R1	CU20-R1	CU25-R1	CU32-R1

Please use ISOVG32 oil if needed.

Stroke/Auto switch type

Bore size (mm)	Standard stroke (mm)		Long stroke (double acting)	Switch model
	Double acting	single acting		
6	5 10 15 20 25 30 35	5 10 15 20	35	KTX-07R KTX-07P
10	5 10 15 20 25 30 35		35	
16	5 10 15 20 25 30 40 50		50	
20	5 10 15 20 25 30 40 50 60		60	
25	5 10 15 20 25 30 40 50 60		60	
32	5 10 15 20 25 30 40 50 60		60	

Ordering code

CU K S 20 - 30 - 30 - S

Series

Null	Standard
K	Non-rotate

Action

Null	Double acting single rod
D	Double rod
J	Adjustable stroke
S	Spring return
T	Spring extend

Bore

Stroke

Adjustable stroke

Code	Stroke
10	10mm
20	20mm
30	30mm
40	40mm
50	50mm
75	75mm
100	100mm

Magnet

Null	without magnet
S	Magnet

■ Dimensions (mm)

CU Series

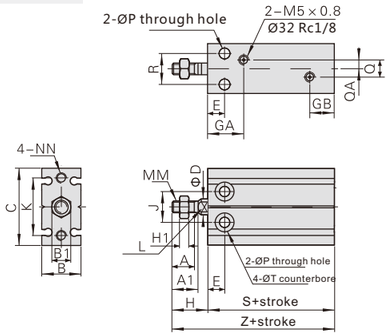

Bore	A	A1	B	B1	C	D	E	GA	GB	H	H1	J	K	L
6	7	8	13	5.5	22	3	7	14	10	13	1.8	10	17	—
10	10	11	15	7	24	4	7	15.5	10	16	3	11	18	—
16	11	12.5	20	8	32	6	7	13	10	16	4	14	25	5
20	13	14	26	10	40	8	9	18.5	11	19	5	16	30	6
25	15.5	18	32	13	50	10	10	20.5	9	23	5	20	38	8
32	19.5	22	40	17	62	12	11	22	12.5	27	6	24	48	10

Bore	MM	NN	P	Q	QA	R	T	S		Z	
								Without magnet	Magnet	Without magnet	Magnet
6	M3×0.5	M3×0.5depth: 5	3.2	—	—	7	6depth: 4.5	33	33	46	46
10	M4×0.7	M3×0.5depth: 5	3.2	—	—	9	6depth: 5.6	36	36	52	52
16	M5×0.8	M4×0.7depth: 5	4.5	3	1.5	12	7.6depth: 6.5	30	40	46	56
20	M6×1.0	M5×0.8depth: 7.5	5.5	9	4.5	16	9.3depth: 8	36	46	55	65
25	M8×1.25	M5×0.8depth: 8	5.5	12	6	20	9.3depth: 9	40	50	63	73
32	M10×1.25	M6×1.0depth: 9	6.6	13	4.5	24	11depth : 11.5	42	52	69	79

CUS Series

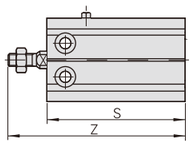

CUT Series

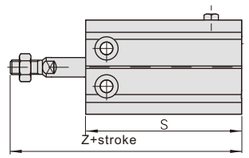

Bore	S (Without magnet)				S' (Magnet)				Z (Without magnet)				Z' (Magnet)			
	5St	10St	15St	20St	5St	10St	15St	20St	5St	10St	15St	20St	5St	10St	15St	20St
6	43	48	58	63	43	48	58	63	56	61	71	76	56	61	71	76
10	46	51	61	66	46	51	61	66	62	67	77	82	62	67	77	82
16	45	50	65	70	55	60	75	80	61	66	81	86	71	76	91	96
20	51	56	71	76	61	66	81	86	70	75	90	95	80	85	100	105
25	55	60	75	80	65	70	85	90	78	83	98	103	88	93	108	113
32	57	62	77	82	67	72	87	92	84	89	104	109	94	99	114	119

CUD Series

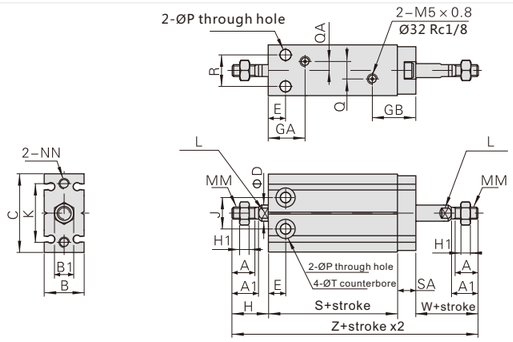

Bore	A	A1	B	B1	C	D	E	GA	GB	H	H1	J	K	L	P	Q
6	7	8	13	5.5	22	3	7	14	16	13	1.8	10	17	—	3.2	—
10	10	11	15	7	24	4	7	15.5	16	16	3	11	18	—	3.2	—
16	11	12.5	20	8	32	6	7	13	17.5	16	4	14	25	5	4.5	3
20	13	14	26	10	40	8	9	18.5	20	19	5	16	30	6	5.5	9
25	15.5	18	32	13	50	10	10	20.5	18	23	5	20	38	8	5.5	12
32	19.5	22	40	17	62	12	11	22	22.5	27	6	24	48	10	6.6	13

Bore	MM	NN	QA	R	SA	T	W	S		Z	
								Without magnet	Magnet	Without magnet	Magnet
6	M3×0.5	M3×0.5depth : 5	—	7	6	6depth : 4.5	13	38	38	70	70
10	M4×0.7	M3×0.5depth : 5	—	9	6	6depth : 5.6	16	36	36	74	74
16	M5×0.8	M4×0.7depth : 5	1.5	12	7.5	7.6depth : 6.5	16	30	40	69.5	79.5
20	M6×1.0	M5×0.8depth : 7.5	4.5	16	9	9.3depth : 8	19	36	46	83	93
25	M8×1.25	M5×0.8depth : 8	6	20	9	9.3depth : 9	23	40	50	95	105
32	M10×1.25	M6×1.0depth : 9	4.5	24	10	11depth : 11.5	27	42	52	106	116

CU Series Free Mount Cylinder
harhesh

■ Dimensions (mm)

CUJ Series

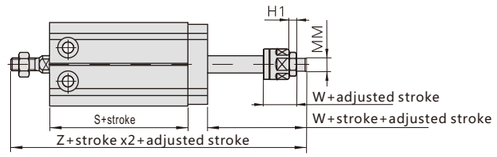

Bore	MM	H1	W	S		Z	
				Without magnet	Magnet	Without magnet	Magnet
6	M3×0.5	1.8	13	38	38	70	70
10	M4×0.7	3	14.7	36	36	72.7	72.7
16	M5×0.8	4	17	30	40	70.5	80.5
20	M6×1.0	5	21	36	46	85	95
25	M8×1.25	5	25	40	50	97	107
32	M10×1.25	6	27	42	52	106	116

CUK Series

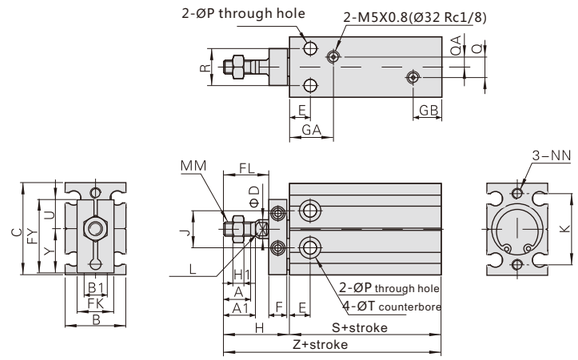

Bore	A	A1	B	B1	C	D	E	F	FL	FK	FY	GA	GB	H	H1	J	K	L	Y
6	7	8	13	5.5	22	3	7	8	9	11	19	14	10	18	1.8	10	17	—	10.9
10	10	11	15	7	24	4	7	8	12	13	20.5	15.5	10	21	3	11	18	—	11.9
16	11	12.5	20	8	32	6	7	8	17	13	26.5	13	10	26	4	14	25	5	15.9
20	13	14	26	10	40	8	9	8	20	16	32	18.5	11	29	5	16	30	6	19.8
25	15.5	18	32	13	50	10	10	10	22	19	40	20.5	9	33	5	20	38	8	24.8
32	19.5	22	40	17	62	12	11	12	29	22	49	22	12.5	42	6	24	48	10	30.8

Bore	MM	NN	P	Q	QA	R	T	U	S		Z	
									Without Magnet	Magnet	Without magnet	Magnet
6	M3×0.5	M3×0.5depth : 5	3.2	—	—	7	6depth : 4.5	8.1	33	33	51	51
10	M4×0.7	M3×0.5depth : 5	3.2	—	—	9	6depth : 5.6	8.6	36	36	57	57
16	M5×0.8	M4×0.7depth : 5	4.5	3	1.5	12	7.6depth : 6.5	10.6	30	40	56	66
20	M6×1.0	M5×0.8depth : 7.5	5.5	9	4.5	16	9.3depth : 8	12.2	36	46	65	75
25	M8×1.25	M5×0.8depth : 8	5.5	12	6	20	9.3depth : 9	15.2	40	50	73	83
32	M10×1.25	M6×1.0depth : 9	6.6	13	4.5	24	11depth : 11.5	18.2	42	52	84	94

CUKS Series

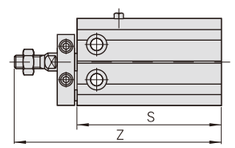

CUKT Series

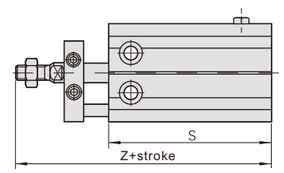

Bore	S (Without magnet)				S' (Magnet)				Z (Without magnet)				Z' (Magnet)			
	5St	10St	15St	20St	5St	10St	15St	20St	5St	10St	15St	20St	5St	10St	15St	20St
6	43	48	58	63	43	48	58	63	61	66	76	81	61	66	76	81
10	46	51	61	66	46	51	61	66	67	72	82	87	67	72	82	87
16	45	50	65	70	55	60	75	80	71	76	91	96	81	86	101	106
20	51	56	71	76	61	66	81	86	80	85	100	105	90	95	110	115
25	55	60	75	80	65	70	85	90	88	93	108	113	98	103	118	123
32	57	62	77	82	67	72	87	92	99	104	119	124	109	114	129	134

CU Series Free Mount Cylinder

■ Dimensions (mm)

CUKD Series

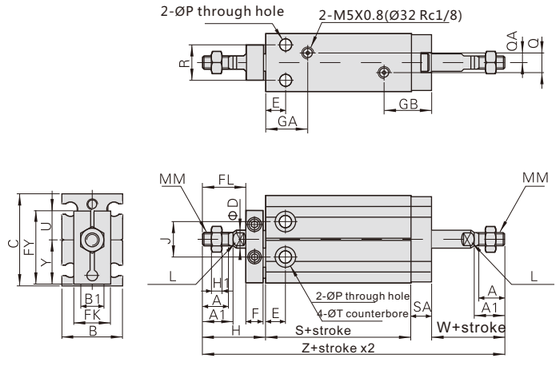

CUKJ Series

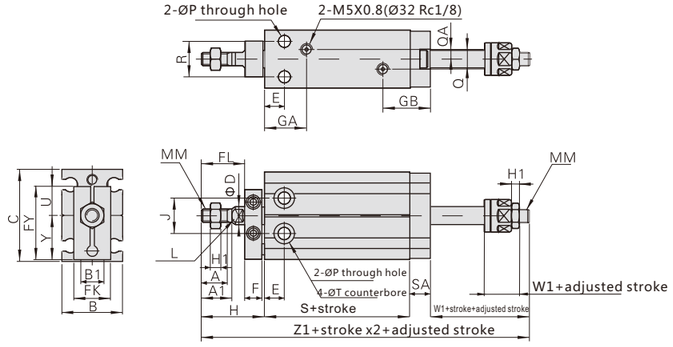

Bore	A	A1	B	B1	C	D	E	F	FL	FK	FY	GA	GB	H	H1	J	L	P	Y
6	7	8	13	5.5	22	3	7	8	9	11	19	14	16	18	1.8	10	—	3.2	10.9
10	10	11	15	7	24	4	7	8	12	13	20.5	15.5	16	21	3	11	—	3.2	11.9
16	11	12.5	20	8	32	6	7	8	17	13	26.5	13	17.5	26	4	14	5	4.5	15.9
20	13	14	26	10	40	8	9	8	20	16	32	18.5	20	29	5	16	6	5.5	19.8
25	15.5	18	32	13	50	10	10	10	22	19	40	20.5	18	33	5	20	8	5.5	24.8
32	19.5	22	40	17	62	12	11	12	29	22	49	22	22.5	42	6	24	10	6.6	30.8

Bore	MM	Q	QA	R	SA	T	U	W	W1	S		Z		Z1	
										Without magnet	Magnet	Without magnet	Magnet	Without magnet	Magnet
6	M3×0.5	—	—	7	6	6depth : 4.5	8.1	13	13	38	38	75	75	75	75
10	M4×0.7	—	—	9	6	6depth : 5.6	8.6	16	14.7	36	36	79	79	77.7	77.7
16	M5×0.8	3	1.5	12	7.5	7.6depth : 6.5	10.6	16	17	30	40	79.5	89.5	80.5	90.5
20	M6×1.0	9	4.5	16	9	9.3depth : 8	12.2	19	21	36	46	93	103	95	105
25	M8×1.25	12	6	20	9	9.3depth : 9	15.2	23	25	40	50	105	115	107	117
32	M10×1.25	13	4.5	24	10	11depth : 11.5	18.2	27	27	42	52	121	131	121	131

■ Production feature

Thin double housing structure, high non-rotating accuracy and 2 times output force, side resistance load.

Symbol

■ Specification

Bore size	10	16	20	25	32
Action	Double acting				
Fluid	Compressed air				
Pressure range	0.15~1.0MPa		0.1~1.0MPa		
Proof pressure	1.5MPa				
Temp. range	-10~60℃				
Speed range	30~500mm/s				
Stroke adjusted range	-10~0mm				
Cushion	Rubber bumper on both ends				
Non-rotating accuracy	±0.40	±0.30			
Port size	M5X0.8				Rc1/8
Code of S/K	CXM10-R1	CXM16-R1	CXM20-R1	CXM25-R1	CXM32-R1

■ Stroke/Auto switch type

Bore (mm)	Standard stroke (mm)	Max.	Switch model
10	10 20 30 40 50 60 70 80 90 100	100	KTX-11R KTX-11P
16	10 20 30 40 50 60 70 80 90 100 125 150 175 200	200	
20	10 20 30 40 50 60 70 80 90 100 125 150 175 200	200	
25	10 20 30 40 50 60 70 80 90 100 125 150 175 200	200	
32	10 20 30 40 50 60 70 80 90 100 125 150 175 200	200	

■ Ordering code

TN 32 - 100

Series

Bore

10	Φ10mm
16	Φ16mm
20	Φ20mm
25	Φ25mm
32	Φ32mm

Stroke
Refer to stroke table

TN Series Dual Rod Cylinder
harhesh

■ Dimensions (mm)

TN10

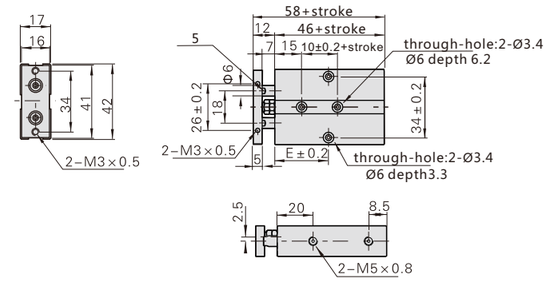

Stroke	10	20	30	40	50	60	70	80	90	100
E	30	30	35	40	45	50	55	60	65	70

TN16~25

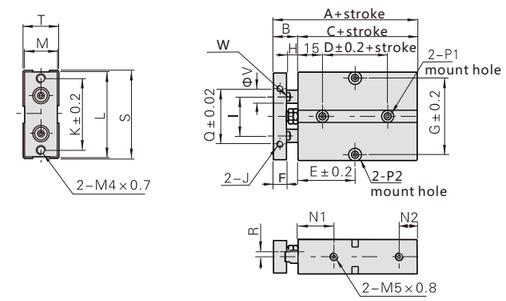

Bore Strokes≤	A	B	C	D	E 10	20	30	40	50	60	70	80	90	100	125	150	175	200	F	G	H	I	K
16	68	15	53	20	30	35	40	45	50	55	60	65	70	75	87.5	100	112.5	125	8	47	7	24	47
20	78	20	58	20	35	35	40	45	50	55	60	65	70	75	87.5	100	112.5	125	10	55	10	28	55
25	81	19	62	30	40	40	45	50	55	60	65	70	75	80	92.5	105	117.5	130	10	66	9	34	66

Bore	J	L	M	N1	N2	P1	P2	Q	R	S	T	V	W
16	M4X0.7 depth5	53	20	22	9	CounterboreØ7.5 depth7.2 through-holeØ4.5	CounterboreØ8 depth4.5 through-holeØ4.5	34	3	54	21	8	6
20	M4X0.7 depth5	61	24	25	11	CounterboreØ7.5 depth7.2 through-holeØ4.5	CounterboreØ8 depth4.5 through-holeØ4.5	44	3.5	62	25	10	8
25	M4X0.7 depth6	72	29	27	11	CounterboreØ7.5 depth7.2 through-holeØ4.5	CounterboreØ8 depth4.5 through-holeØ4.5	56	6	73	30	12	10

TN32

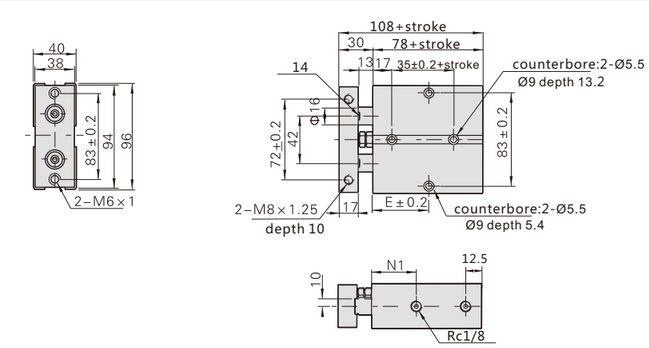

Stroke	10	20	30	40	50	60	70	80	90	100	125	150	175	200
E	45	50	55	60	65	70	75	80	85	90	102.5	115	127.5	140
N1	35	40												

Product feature

Small structure, side resistance load, high non-rotating, easy mount, two piping type options.

Symbol

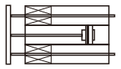

Specification

Bore (mm)		12	16	20	25	32	40	50	63
Fluid		Compressed air							
Action		Double acting							
Max. pressure (MPa)		1.0							
Min. pressure (MPa)		0.12		0.1					
Ambient and fluid temp.		-10~+60℃（No freezing)							
Piston speed		50~500mm/s							
Cushion		Rubber bumper on both ends							
*Lubrication		Non-lube							
Bearing		Slide bearing/Ball bearing							
Non-ratating accuracy	Slide bearing	±0.08°		±0.07°		±0.06°		±0.05°	
	Ball bearing	±0.10°		±0.09°		±0.08°		±0.06°	
Port size		M5×0.8		Rc1/8				Rc1/4	

Please use ISOVG32 oil if needed.

Stroke/Auto switch type

Bore(mm)	Standard stroke*(mm)	Switch model
12、16	10 20 30 40 50 75 100 125 150 175 200	KTX-07R KTX-07P
20、25	20 30 40 50 75 100 125 150 175 200	
32、40、50、63	25 50 75 100 125 150 175 200	

Ordering code

CGP M 25 - 40

Bearing

M	Slide bearing
L	Ball bearing

Bore

Stroke

Load weight and torque

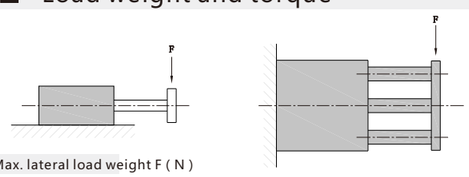

Max. torque T(N.m)

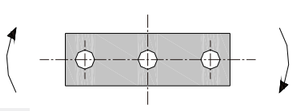

Max. lateral load weight F (N)

Stroke (mm)	Bearing	Stroke(mm)											
		10	20	25	30	40	50	75	100	125	150	175	200
12	CGPM	24	19	-	17	14	13	26	22	19	17	15	13
	CGPL	37	27	-	22	35	30	23	18	15	12	11	10
16	CGPM	38	31	-	27	23	21	37	32	27	24	22	20
	CGPL	54	40	-	32	54	47	35	28	23	20	17	15
20	CGPM	-	49	-	43	38	35	87	75	66	59	54	49
	CGPL	-	58	-	48	101	90	70	58	62	54	48	43
25	CGPM	-	69	-	60	54	49	116	100	88	79	71	65
	CGPL	-	82	-	68	132	118	93	77	80	70	62	55
32	CGPM	-	-	203	-	-	164	182	159	142	127	116	106
	CGPL	-	-	191	-	-	157	164	144	203	186	171	158
40	CGPM	-	-	203	-	-	164	182	159	142	127	116	106
	CGPL	-	-	190	-	-	157	163	144	203	185	171	158
50	CGPM	-	-	296	-	-	245	273	241	216	195	179	164
	CGPL	-	-	208	-	-	173	223	199	264	242	224	207
63	CGPM	-	-	296	-	-	245	273	241	216	195	179	164
	CGPL	-	-	206	-	-	171	221	196	262	240	221	205

Max. torque T(N.m)

Stroke (mm)	Bearing	Stroke(mm)											
		10	20	25	30	40	50	75	100	125	150	175	200
12	CGPM	0.39	0.32	-	0.27	0.24	0.21	0.43	0.36	0.31	0.27	0.24	0.22
	CGPL	0.61	0.45	-	0.35	0.58	0.50	0.37	0.29	0.24	0.20	0.18	0.16
16	CGPM	0.69	0.58	-	0.49	0.43	0.38	0.69	0.58	0.50	0.44	0.40	0.36
	CGPL	0.99	0.74	-	0.59	0.99	0.86	0.65	0.52	0.43	0.37	0.32	0.28
20	CGPM	-	1.05	-	0.93	0.83	0.75	1.88	1.63	1.44	1.28	1.16	1.06
	CGPL	-	1.26	-	1.03	2.17	1.94	1.52	1.25	1.34	1.17	1.03	0.93
25	CGPM	-	1.76	-	1.55	1.38	1.25	2.96	2.57	2.26	2.02	1.83	1.67
	CGPL	-	2.11	-	1.75	3.37	3.02	2.38	1.97	2.05	1.78	1.58	1.41
32	CGPM	-	-	6.35	-	-	5.13	5.69	4.97	4.42	3.98	3.61	3.31
	CGPL	-	-	5.95	-	-	4.89	5.11	4.51	6.34	5.79	5.33	4.93
40	CGPM	-	-	7.00	-	-	5.66	6.27	5.48	4.87	4.38	3.98	3.65
	CGPL	-	-	6.55	-	-	5.39	5.62	4.96	6.98	6.38	5.87	5.43
50	CGPM	-	-	13.0	-	-	10.8	12.0	10.6	9.50	8.60	7.86	7.24
	CGPL	-	-	9.17	-	-	7.62	9.83	8.74	11.6	10.7	9.83	9.12
63	CGPM	-	-	14.7	-	-	12.1	13.5	11.9	10.7	9.69	8.86	8.16
	CGPL	-	-	10.2	-	-	8.48	11.0	9.74	13.0	11.9	11.0	10.2

CGP Series Compact Guide Cyinder
harhesh

Dimensions (mm)

CGP12~25

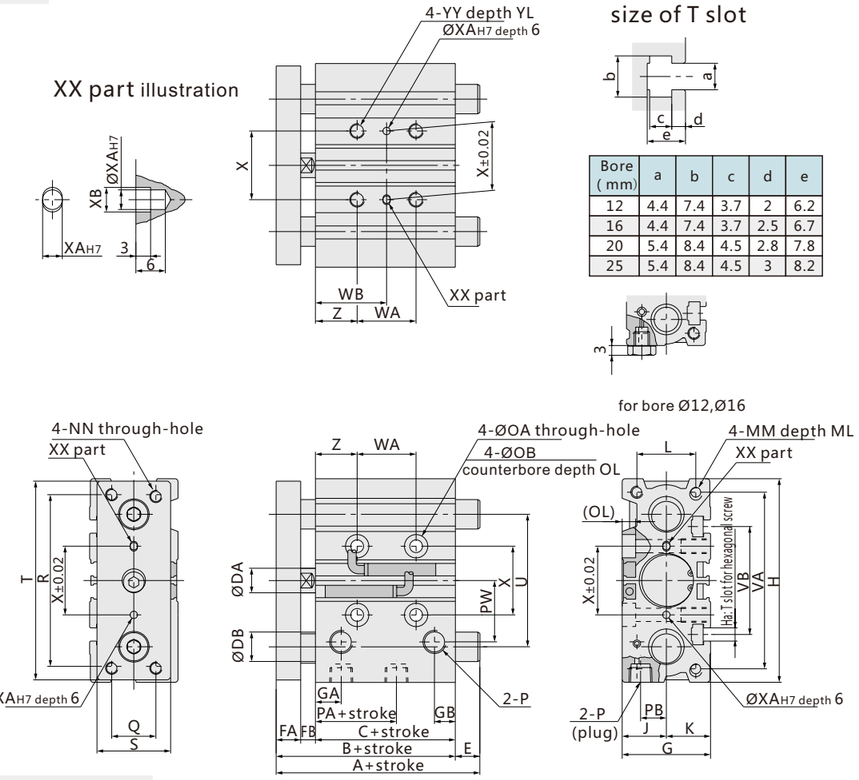

CGPM, CGPL common dimensions

for bore Ø12 , Ø16

st=stroke

Bore (mm)	Standard stroke	B	C	DA	FA	FB	G	GA	GB	H	J	K	L	MM	ML	NN	OA	OB	OL	P	PA	PB	PW	Q
12	10,20,30,40,50 75,100,125,150 175,200	42	29	6	8	5	26	8.5	8.5	58	13	13	18	M4×0.7	10	M4×0.7	4.3	8	4.5	M5×0.8	13	8	18	14
16		46	33	8	8	5	30	9.5	9	64	15	15	22	M5×0.8	12	M5×0.8	4.3	8	4.5	M5×0.8	15	10	19	16
20	20,30,40,50,75,100 125,150,175,200	53	37	10	10	6	36	10	9.5	83	18	18	24	M5×0.8	13	M5×0.8	5.3	9.5	5.5	1/8	12.5	11.5	25	18
25		53.5	37.5	12	10	6	42	11.5	10	93	21	21	30	M6×1.0	15	M6×1.0	5.3	9.5	5.5	1/8	12.5	13.5	28.5	26

Bore (mm)	Standard stroke	R	S	T	U	VA	VB	WA			WB			X	XA	XB	YY	YL	Z
								<30st	31st-100st	101st-200st	<30st	31st-100st	101st-200st						
12	10,20,30,40,50 75,100,125,150 175,200	48	22	56	41	50	37	20	40	110	15	25	60	23	3	3.5	M5×0.8	10	5
16		54	25	62	46	56	38	24	44	110	17	27	60	24	3	3.5	M5×0.8	10	5
20	20,30,40,50,75,100 125,150,175,200	70	30	81	54	72	44	24	44	120	29	39	77	28	3	3.5	M6×1.0	12	17
25		78	38	91	64	82	50	24	44	120	29	39	77	34	4	4.5	M6×1.0	12	17

CGPM (Slide bearing) size A, DB, E

Bore (mm)	A			DB	E		
	<30st	31st~100st	>101st		<30st	31~100st	>101st
12	42	55	77	8	0	13	35
16	46	65	89	10	0	19	43

CGPL (Ball bearing) size A, DB, E

Bore (mm)	A			DB	E		
	<30st	31st~100st	>101st		<30st	31st~100st	>101st
12	42	55	77	6	0	13	35
16	46	65	89	8	0	19	43

Bore (mm)	A			DB		E		
	<50st	51st~100st	>101st	CGPM	CGPL	<50st	51~100st	>101st
20	53	78	103	12	10	0	25	50
25	53.5	80.5	104.5	16	12	0	27	51

■ Dimensions (mm)

CGP32~63

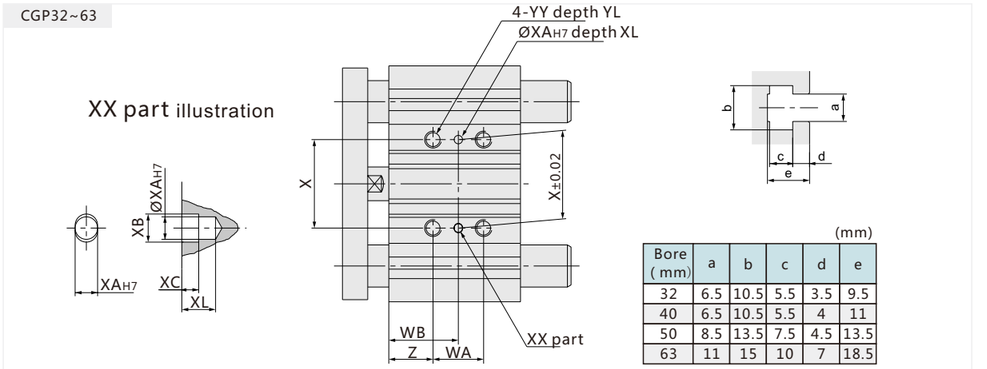

(mm)

Bore (mm)	a	b	c	d	e
32	6.5	10.5	5.5	3.5	9.5
40	6.5	10.5	5.5	4	11
50	8.5	13.5	7.5	4.5	13.5
63	11	15	10	7	18.5

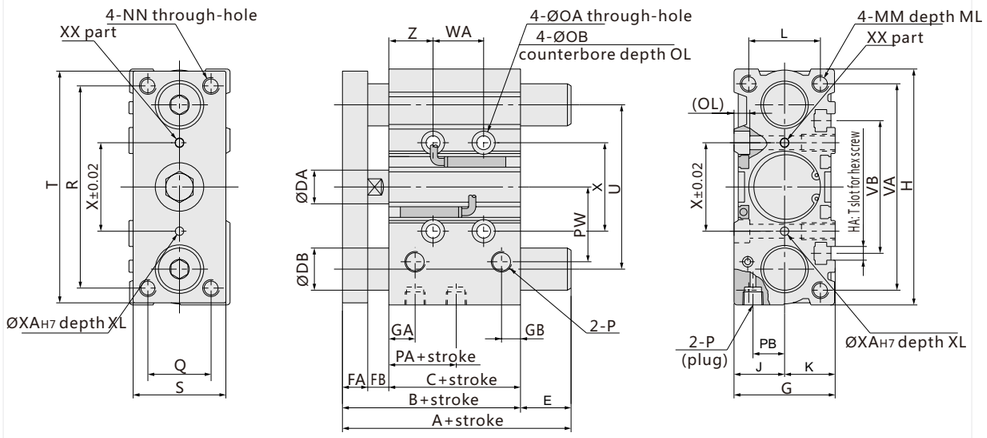

CGPM、CGPL common dimensions

st=stroke

Bore (mm)	Standard stroke	B	C	DA	FA	FB	G	GA	GB	H	J	K	L	MM	ML	NN	OA	OB	OL	P	PA	PB	PW	Q
32	25,50,75,100,125, 150,175,200	59.5	37.5	16	12	10	48	10.5	10	112	24	24	34	M8×1.25	20	M8×1.25	6.5	11	7.5	1/8	7	16	34	30
40		66	44	16	12	10	54	13.5	11	120	27	27	40	M8×1.25	20	M8×1.25	6.5	11	7.5	1/8	13	18	38	30
50		72	44	20	16	12	64	13.5	11	148	32	32	46	M10×1.5	22	M10×1.5	8.6	14	9	1/4	9	21.5	47	40
63		77	49	20	16	12	78	15.5	13.5	162	39	39	58	M10×1.5	22	M10×1.5	8.6	14	9	1/4	14	28	55	50

Bore (mm)	R	S	T	U	VA	VB	WA			WB			X	XA	XB	XC	XL	YY	YL	Z
							<40st	41st-110st	111st-200st	<40st	41st-110st	111st-200st								
32	96	44	110	78	98	63	24	48	124	33	45	83	42	4	4.5	3	6	M8×1.25	16	21
40	104	44	118	86	106	72	24	48	124	34	46	84	50	4	4.5	3	6	M8×1.25	16	22
50	130	60	146	110	130	92	24	48	124	36	48	86	66	5	6	4	8	M10×1.5	20	24
63	130	70	158	124	142	110	28	52	128	38	50	88	80	5	6	4	8	M10×1.5	20	24

Bore (mm)	A			DB		E		
	<50st	51st~100st	101st~200st	CGPM	CGPL	<50st	51st~100st	101st~200st
32	64	102	126	20	16	4.5	42.5	66.5
40	66	102	126	20	16	0	36	60
50	76	118	134	25	20	4	46	62
63	77	118	134	25	20	0	41	57

Symbol

■ Product feature

High precision use ball bushing bearing, the position accuracy to ±0.01mm.
Workpiece easy mount, great load power.
Hollow shaft can be used to introduce the wires or piping.
Standard with Angle adjustment device, adjust the Angle range (0 ~ 190 °), with magnet ring inside, switch can be installed.

■ Specification

Series		10	20	30	50	70	100
Fluid		Compressed air					
Action		Double acting					
Max. pressure	Adjustment bolt	1.0MPa(10.2kgf/cm²)					
	Shock absorber	0.6MPa(6.1kgf/cm²)					
Min. pressure		0.1MPa(1.0kgf/cm²)					
Ambient and fluid temperature		0~60°C					
Cushion		Rubber bumper(standard)/Shock absorber(optional)					
Allowable kinetic energy	Adjustment bolt	0.007J	0.025J	0.048J	0.081J	0.24J	0.32J
	Shock absorber	0.039J	0.116J	0.116J	0.294J	1.1J	1.6J
Angle adjustment range		0~190°					
Maximum rotation		190°					
Stable swing time range	Adjustment bolt	0.2~1.0s/90°				0.2~1.5s/90°	0.2~2.0s/90°
	Shock absorber	0.2~0.7s/90°				0.2~1.0s/90°	
Piston diameter		Φ15	Φ18	Φ21	Φ25	Φ28	Φ32
Port size		M5x0.8	Rc1/8				

Note: the max. pressure is restricted the maximum allowable loads of hydraulic absorber.

■ Ordering code

CRM B 10 A

Series

B	Standard
A	High Precision

Bore

Option

A	With adjustment bolt
R	With internal shock absorber

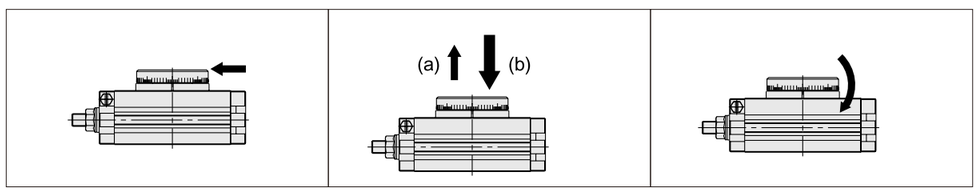

Series	Allowable kinetic energy(N)		Allowable axial load(N)				Allowable bending moment(N.m)		Efficient output torque (N.m) (<0.5MPa)
	Standard	High Precision	Series Standard	Series High Precision	Series Standard	Series High Precision	Standard	High Precision	
CRM□10□		86	74	74	78	107	2.4	2.9	0.89
CRM□20□	147	166	137	137	137	197	4.0	4.8	1.84
CRM□30□	196	233	197	197	363	398	5.3	6.4	2.73
CRM□50□	314	378	296	296	451	517	9.7	12	4.64
CRM□70□	333	–	296	–	476	–	12.0	–	6.79
CRM□100□	390	–	493	–	708	–	18.0	–	10.1

CRM Series Turning Swing Cylinder
harhesh

■ Dimensions (mm)

Standard(10,20,30,50)
CRMB□A

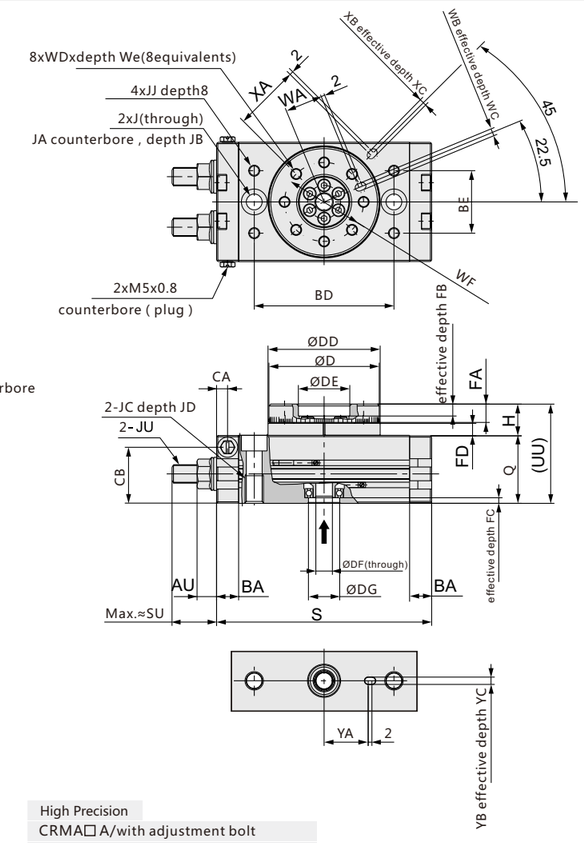

Shock absorber
CRMA□R
CRMB□R

High Precision
CRMA□A/with adjustment bolt
CRMB□R/with shock absorber

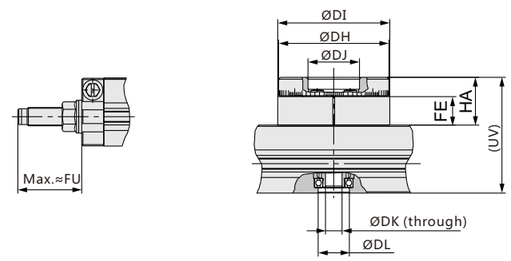

Series	DH	DI	DJ	DK	DL	FE	HA	UV
10	45h8	46h8	20H8	6	15H8	10	18.5	52.5
20	60h8	61h8	28H8	9	17H8	15.5	26	63
CRMA30	65h8	67h8	32H8	12	22H8	16.5	27	67
CRMB30	65h8	67h8	32H8	9	22H8	16.5	27	67
50	75h8	77h8	35H8	13	26H8	17.5	30	76

Series	AA	A	AU	AV	AW	AX	AY	BA	BB	BC	BD	BE	CA	CB	D	DD	DE	DF	DG	FA	FB	FC	FD	H	J	JA	JB
10	55.4	50	6.6	20	15.5	12	4	9.5	34.5	27.8	60	27	4.5	28.5	45h9	46h9	20H9	6	15H9	8	4	3	4.5	13	6.8	11	6.5
20	70.8	65	7.6	27.5	16	14	5	12	46	30	76	34	6	30.5	60h9	61h9	28H9	9	17H9	10	6	2.5	6.5	17	8.6	14	8.5
30	75.4	70	7.6	29	18.5	14	5	12	50	32	84	37	6.5	33.5	65h9	67h9	32H9	12	22H9	10	4.5	3	6.5	17	8.6	14	8.5
50	85.4	80	10	38	22	19	6	15.5	63	37.5	100	50	10	37.5	75h9	77h9	35H9	13	26H9	12	5	3	7.5	20	10.5	18	10.5

Series	JC	JD	JJ	JU	P	Q	S	SD	SE	SF	SU	UU	WA	WB	WC	WD	WE	WF	XA	XB	XC	YA	YB	YC
10	M8X1.25	12	M5X0.8	M8X1.0	M5X0.8	34	92	9	13	45	17.7	47	15	3H9	3.5	M5X0.8	8	32	27	3H9	3.5	19	3H9	3.5
20	M10X1.5	15	M6X1.0	M10X1.0	M5X0.8	37	117	10	12	60	25	54	20.5	4H9	4.5	M6X1.0	10	43	36	4H9	4.5	24	4H9	4.5
30	M10X1.5	15	M6X1.0	M10X1.0	Rc1/8	40	127	11.5	14	65	25	57	23	4H9	4.5	M6X1.0	10	48	39	4H9	4.5	28	4H9	4.5
50	M12X1.75	18	M8X1.25	M14X1.5	Rc1/8	46	152	14.5	15	75	31.4	66	26.5	5H9	5.5	M8X1.25	12	55	45	5H9	5.5	33	5H9	5.5

■ Dimensions (mm)

Standard(70,100)

CRMB□A

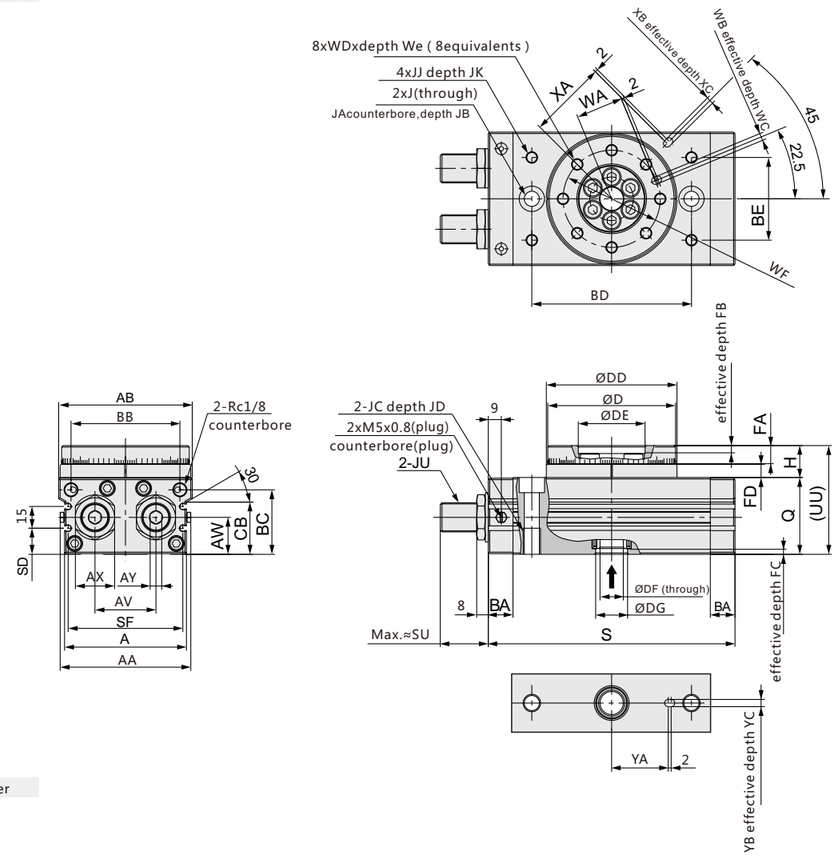

Shock absorber

CRMB□R

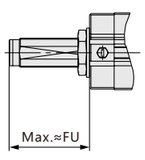

Series	FU
70	55.4
100	55.5

Series	AA	AB	A	AV	AW	AX	AY	BA	BB	BC	BD	BE	CB	D	DD	DE	DF	DG	FA	FB	FC	FD	H	J	JA	JB
70	90	92	84	42	25.5	27	8	17	75	44.5	110	57	36	88h9	90h9	46H9	16	22H9	12.5	5	3.5	9	22	10.4	17.5	10.5
100	101	102	95	50	29.5	27	8	17	85	50.5	130	66	42	98h9	100h9	56H9	19	24H9	14.5	6	3.5	12	27	10.4	17.5	10.5

Series	JC	JD	JJ	JK	JU	Q	S	SD	SF	SU	UU	WA	WB	WC	WD	WE	WF	XA	XB	XC	YA	YB	YC
70	M12X1.75	18	M8X1.25	10	M20X1.5	53	170	18	79	34.2	75	32.5	5H9	5.5	M8X1.25	12.5	67	54	5H9	3.5	39	5H9	3.5
100	M12X1.75	18	M8X1.25	10	M20X1.5	59	189	22	90	34.3	86	37.5	6H9	6.5	M10X1.5	14.5	77	59	6H9	4.5	49	6H9	4.5